4000121771-2.02.03

Instructions for Use
Installation and Servicing

To be left with the user

Themaclassic F24E PLUS

Fanned Flue Combination Boiler

G.C.No. 47-920-37

Themaclassic F30E PLUS

Fanned Flue System Boiler

G.C.No. 47-920-38

spares & parts online
IBASIS.co.uk©

Saunier Duval

Hepworth Heating Ltd., Nottingham Road, Belper, Derbyshire. DE56 1JT

Guarantee Registration

Thank you for installing a new Saunier Duval appliance in your home.
Saunier Duval appliances' are manufactured to the very highest standard so we are pleased to offer our customers' a Comprehensive Guarantee.
This product is guaranteed for 24 months from the date of installation or 30 months from the date of manufacture, whichever is the shorter, for parts. In addition this product is guaranteed for 12 months from the date of installation or 18 months from the date of manufacture, whichever is the shorter, for labour.
The second year of the parts guarantee, from the beginning of the 13th month onwards after installation, is conditional upon the boiler having been serviced by a CORGI registered gas installer, in accordance with the manufacturer's recommendations. We strongly recommend regular servicing of your gas appliance, but where the condition is not met, any chargeable spare parts or components issued within the applicable guarantee period still benefit from a 12 month warranty from the date of issue by the manufacturer.

We recommend you complete and return as soon as possible your guarantee registration return literature, supplied in the document envelope.

If your guarantee registration return literature is missing you can obtain a copy by telephoning

Heatcall our Customer Service Company 00 44(0)1773 828100.

RECORD YOUR SAUNIER DUVAL APPLIANCE DIRECT BY CALLING

0208 247 9857

Customer service :

Saunier Duval GB Great Britain :
Tel. 00 44 (0) 828100
Fax. 00 44 (0)1773 828070
Hepworth Heating Ltd.,
Nottingham Road, Belper, Derbyshire. DE56 1JT

Saunier Duval IE IRELAND:
Tel. 00 353 (0)14191919
Fax. 00 353 (0)14584806
Hevac,
Muirfield Drive
Naas Road
Dublin 12

Technical Advice Line:

Tel. 00 44 (0)1773 828400

General and Sales enquiries:

Tel. (01773) 824141
Fax. (01773) 820569

benchmark
The code of practice for the installation, commissioning & servicing of gas central heating

Contents

CONTENTS	DESCRIPTION	SECTION	PAGE No.
INSTRUCTION FOR USE	Important Information		4
	Draining and Filling		5
	Appliance Introduction		5
	Appliance Safety Devices		5
	Maintenance and Servicing		6
	Controls and Lighting		7
	Programmer instructions for use		9
INSTALLATION INSTRUCTIONS	Technical Data	1	10
	General Information	2	11
	Heating System Design	3	11
	Domestic Hot Water System Design	4	12
	Boiler Schematic	5	13
	Boiler Location, Flue and Ventilation	6	14
	Fixing Jig	7	16
	Boiler Preparation and System Connections	8	17
	Boiler Installation	9	18
	Horizontal Rear Flue Installation	10	19
	Horizontal Telescopic Top Flue Installation	11	22
	Horizontal Top Flue Installation	12	24
	Electrical Connection	13	26
	Commissioning	14	28
	Boiler Settings	15	30
	Changing Gas Type	16	32
SERVICING INSTRUCTIONS	Routine Cleaning and Inspection	17	33
	Fault Finding	18	37
	Wiring Diagram	19	43
	Replacement of Parts	20	44
	Spare Parts	21	56

Important Information

Gas safety (Installation and use) Regulations

In your interests and that of gas safety, it is the law that ALL gas appliances are installed and serviced by a competent person in accordance with the regulations.

Testing and Certification

This boiler is tested and certificated for safety and performance. It is therefore important that no alteration is made to the boiler, without permission, in writing, from Hepworth Heating Ltd.

Any alteration not approved by Hepworth Heating Ltd., could invalidate the certification, boiler warranty and may also infringe the current issue of the Statutory Requirements. The requirements are: The installation of this boiler must be carried out by a competent person in accordance with the current rules in force in the countries of destination at the time of installation, for Ireland, install in accordance with I.S.813 "Domestic Gas Installation". Manufacture's instructions supplied must not be taken as overriding statutory requirements.

CE Mark

This boiler meets the requirements of Statutory Instrument No. 3083 The boiler (Efficiency) Regulations, and therefore is deemed to meet the requirements of Directive 92/42/EEC on the efficiency requirements for new hot water boilers fired with liquid or gaseous fuels.

Type test for purposes of Regulation 5 certified by: Notified body 0049.

Product/production certified by: Notified body 0049.

The CE mark on this appliance shows compliance with:

1. Directive 90/396/EEC on the approximation of the laws of the Member States relating to appliances burning gaseous fuels.

2. Directive 73/23/EEC on the harmonization of the Laws of the Member States relating to the electrical equipment designed for use within certain voltage limits.

3. Directive 89/336/EEC on the approximation of the Laws of the Member States relating to electromagnetic compatibility.

Control of Substances Hazardous to Health

The adhesives and sealants used in this appliance are cured and give no known hazard in this state.

Insulation pads / ceramic fibre
These can cause irritation to skin, eyes and the respiratory tract.
If you have a history of skin complaint you may be susceptible to irritation. High dust levels are usual only if the material is broken.
Normal handling should not cause discomfort, but follow normal good hygiene and wash your hands before eating, drinking or going to the lavatory.
If you do suffer irritation to the eyes or severe irritation to the skin seek medical attention.
The insulation is composed of non-combustible material.

Electrical Supply

WARNING: This boiler must be earthed.

All system components shall be of an approved type and shall be connected in accordance with the current issue of BS7671 and any applicable local regulations.

All external wiring between the appliance and the electrical supply and earthing requirements shall comply with the current IEE Regulations.

Connection of the boiler and system controls to the mains supply must be through a common isolator and must be fused at 3A, maximum. This method of connection must be by a fused double pole isolating switch, with a minimum contact separation of 3mm on both poles. The switch should be readily accessible and preferably adjacent to the appliance. It should supply the appliance only and be easily identifiable as so doing.

Alternatively, an unswitched shuttered socket outlet and 3A fused 3 pin plug, both to the current issue of BS1363 may be used provided that they are not used in a room containing a bath or shower.

Wiring to the boiler must be PVC 85°C insulated cable, not less than 0.75mm^2 (24/0.20mm).

Gas leak or fault

WARNING: If a gas leak or fault exists or is suspected, turn the boiler off and consult the local gas supply company or your installation/service company.

Manual Handling Guidance

During the appliance installation it will be necessary to employ caution and assistance whilst lifting as the appliance exceeds the recommended weight for a one man lift.

In certain situations it may be required to use a mechanical handling aid.

Take care to avoid trip hazards, slippery or wet surfaces.

Heating System Controls

The heating system must be controlled as described in the relevant part of the current issue of :

Building Regulations, approved document L1, and the references:

1) GIL 59, 2000: Central heating system specification (CheSS) and

2) GPG 302, 2001: Controls for domestic central heating system and hot water. BRECSU.

3) The domestic heating and hot water guide to the building regulations 2001.

Thermostatic radiator valves may be installed, however they must not be fitted in a room where the room thermostat is located.

Air in the heating system

Persistent air in the heating system may indicate leaks in the system or corrosion taking place. Call your Installation/Servicing company.

Protection Against Freezing

The appliance has a built in frost protection programme as long as the electricity and gas are left switched on.

This device operates the burner and system pump when the temperature inside the boiler falls below 6°C.

Any other exposed areas of the system should be protected by a separate frost thermostat.

Draining and Filling

Caution: The boiler is installed as part of a sealed system which must only be drained and filled by a competent person.

If the mains electricity and gas are to be turned off for any long periods during severe weather, it is recommended that the whole system, including the boiler, refer to diagram 1, should be drained to avoid the risk of freezing. Make sure that, if fitted, the immersion heater in the cylinder is switched off.

If in doubt, consult your servicing company.

• **If the boiler loses water:** the pressure will be indicated **(a)** and the boiler ON indicator **(b)** will flash red indicating a fault. Fill the system by the filling device **(c)** at the bottom of the boiler until the pressure gauge reads 1.0 bar.

Reset boiler: refer to diagram 2, switch On/Off to **(0)**, wait for five seconds. Switch On/Off to **(I)** to reset the appliance.

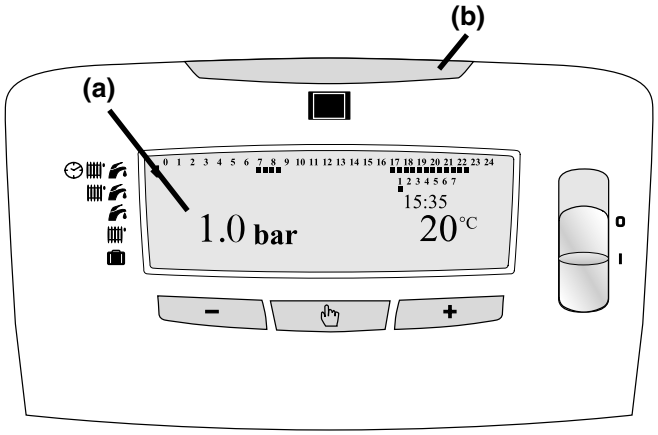

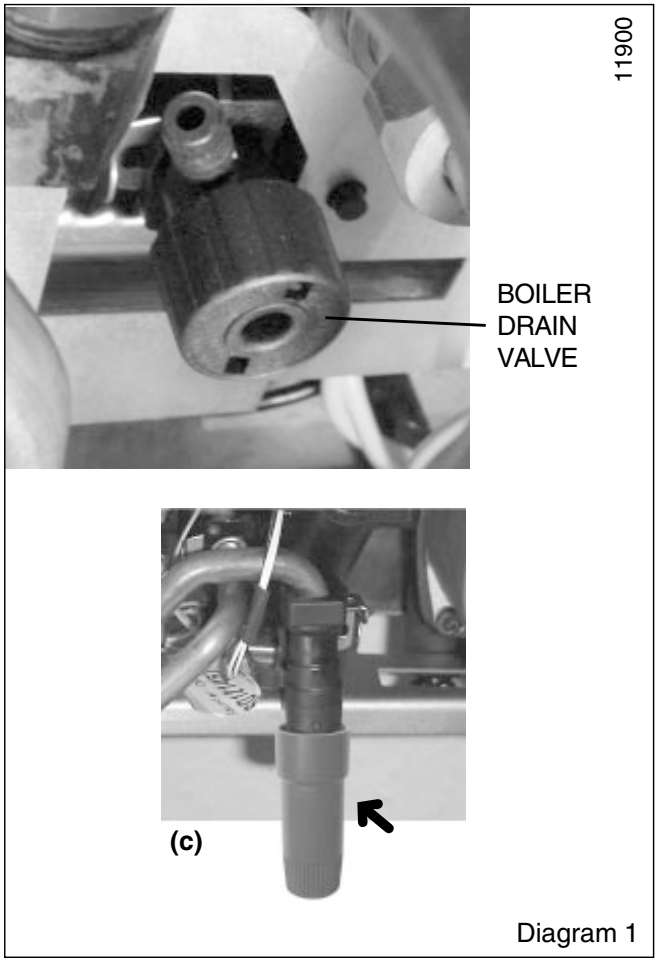

Diagram 1

Appliance Introduction

The **Themaclassic plus** boiler is a wall mounted modulating combination boiler with electronic ignition providing central heating and instantaneous hot water.

The boilers are equipped with a litre domestic hot water storage vessel that ensures maximum hot water temperature stability during domestic demand.

The boiler is of the $\mathbf{II_{2H3+}}$ category for use with Natural Gas (G20) as distributed in the United Kingdom, or Butane (G30), Propane (G31) with the appropriate conversion kit.

The boiler has a fan assisted balanced flue which both discharges the products of combustion to and draws the combustion air from the outside of the room.

Both the central heating and domestic hot water temperature are user adjustable.

Domestic hot water demand always has priority over heating demand.

The boiler is designed for use as part of a sealed water central heating system with fully pumped circulation. The pump, expansion vessel and associated safety devices are all fitted within the boiler.

The boiler can be installed against either an external wall or on an adjacent inside wall, that is, the flue system will pass directly to the rear or to either side to the terminal fitted on the outside wall face.

This boiler may be installed in any room, although particular attention is drawn to the installation of a boiler in a room containing a bath or shower where reference must be made to the relevant requirements.

Any electrical switch or boiler control utilising mains electricity should be placed so that it cannot be touched by a person using the bath or shower.

In GB this is the current I.E.E. WIRING REGULATIONS and BUILDING REGULATIONS.

In IE reference should be made to the current edition of I.S.813 "Domestic Gas Installations" and the current ETCI rules.

These instructions should be carefully followed for the safe and economical use of your boiler. The 'User Controls and Lighting' section describes how to safely use the boiler.

Note: The boiler serial number is marked on the data label attached to the rear of the control box.

Flue options

There are various flue systems to choose from, for detailed information refer to flue options guide, which is available from your nearest stockist.

Accessories

A range of accessories are available.

For further information contact your supplier.

Appliance Safety Devices

Air flow rate safety device

If the flue is obstructed, even partially, the built in safety system will turn the boiler OFF, the fan will continue to run. The boiler will be ready to operate when the fault has been cleared.

Overheating safety

In the event of the boiler overheating the safety devices will cause a safety shutdown. If this happens, call your Installation/ Servicing company.

Electrical supply failure

The boiler will not operate without an electrical supply. Normal operation of the boiler should resume when the electrical supply is restored.

Reset any central heating system controls, to resume normal operation.

If the boiler does not resume normal operation turn the mains reset switch off and on. If the boiler does not resume normal operation it is advisable to consult your installation / servicing company.

Frost protection

The appliance has a built in frost protection device that protects the boiler from freezing. With the gas and electric supplies ON and irrespective of any room thermostat setting, the frost protection device will light the boiler when the temperature of the boiler water falls below 6°C.

When the temperature reaches 16°C, the boiler stops.

Any other exposed areas of the system should be protected by a separate frost thermostat.

Heating safety valve

CAUTION: A heating safety valve with a discharge pipe is fitted to this boiler.

The valve **MUST NOT BE TOUCHED** except by a competent person. If the valve discharges at any time, switch the boiler off and isolate it from the electrical supply. Contact your installation/ service company.

Domestic Hot Water safety valve

CAUTION: A domestic hot water safety valve, with a discharge pipe is fitted to this boiler.

The valve **MUST NOT BE TOUCHED** except by a competent person. If the valve discharges at any time, switch the boiler off and isolate it from the electrical supply. Contact your installation/ service company.

Maintenance and Servicing

Cleaning

WARNING: This appliance contains metal parts (components) and care should be taken when handling and cleaning with particular regard to edges of sheet metal parts to avoid any possibility of personal injury.

The boiler casing can be cleaned with a damp cloth, followed by a dry cloth to polish.

Do not use abrasive or solvent cleaners.

Maintenance and Servicing

To ensure the continued efficient and safe operation of the appliance it is recommended that it is checked and serviced as necessary at regular intervals but in general once a year should be enough, refer to guarantee registration on the inside front cover of this literature.

If this appliance is installed in a rented property there is a duty of care imposed on the owner of the property by the current issue of the Gas Safety (Installation and Use) Regulations, Section 35.

Servicing/maintenance should be carried out by a competent person in accordance with the rules in force in the countries of destination.

To obtain service, please call your installer or Heatcall (Saunier Duval's own service organisation) using the telephone number on the inside front cover of this literature.

Please be advised that the 'Benchmark' logbook should be completed by the engineer on completion of commissioning and servicing.

All CORGI Registered Installers carry a CORGI ID card, and have a registration number. Both should be recorded in your benchmark Logbook. You can check your installer is CORGI registered by calling CORGI direct on: 01256 372300.

Spare Parts

REMEMBER, When replacing a part on this appliance, use only spare parts that you can be assured conform to the safety and performance specification that we require. Do not use reconditioned or copy parts that have not been clearly authorised by Hepworth Heating Ltd.

If a part is required contact Heatcall (Saunier Duval's own service organisation) using the telephone number on the inside front cover of this booklet.

Please quote the name of the appliance, this infomation will be on the name badge on the front of the appliance.

If in doubt seek advice from the local gas company or Heatcall (Saunier Duval's own service organisation) using the telephone number on the inside front cover of this booklet.

Controls and lighting

Central heating adjustment

The temperature of the water in the central heating circuit can be set between, approx. 38°C and 87°C.

It is supplied, factory set to 38°C - 73°C

Domestic hot water

The temperature can be adjusted from approx. 38°C up to 65°C.

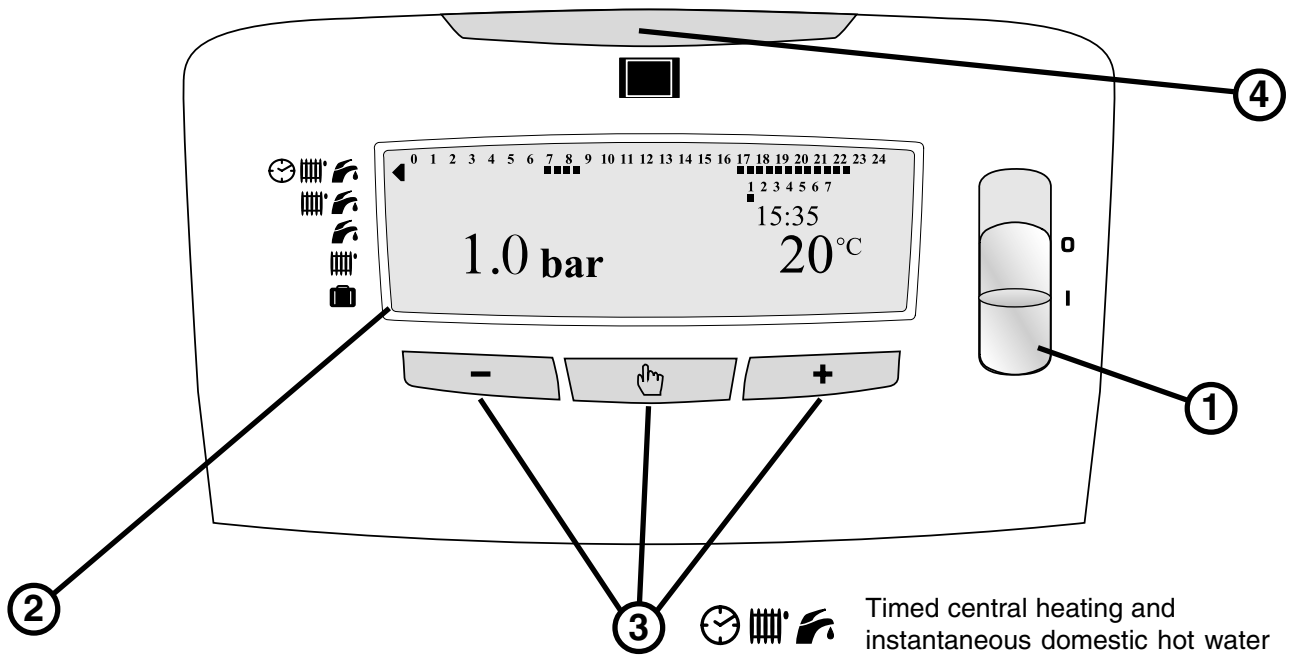

1 - OFF/ON switch

2 - Display

3 - Programing buttons

4 - Running lamp illuminated green when boiler is ON (flashing red when fault indicated)

Timed central heating and instantaneous domestic hot water

Central heating and domestic hot water

Domestic hot water only

Central heating only

Long absence / Holiday mode and Appliance frost protection

Diagram 2

1. Lighting the boiler:

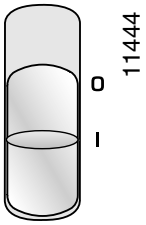

Make sure that:

- The boiler is connected to the electrical supply.
- The gas service cock is open.

Switch **ON (I)**

The running lamp will illuminate green.

2. Stop the boiler:

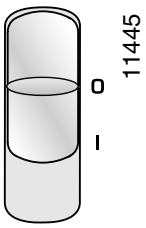

- Switch to **OFF (0)** the electrical supply is OFF.

3. Domestic hot water temperature adjustment:

- Press button once, is displayed and the current temperature setting flashes.
- Press **-** or **+** to set a temperature between 38°c to 65°c.
- The display will default to normal after 5 seconds if no buttons are pressed.

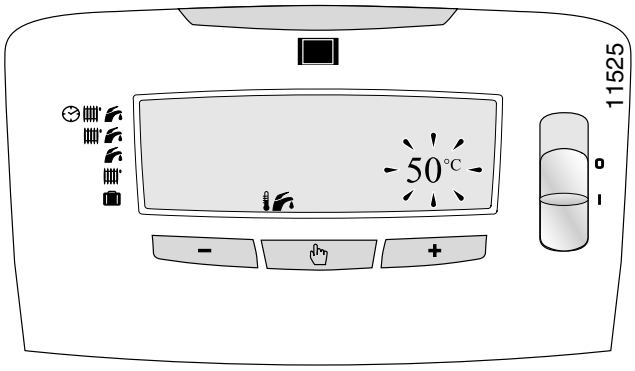

4. Central heating temperature adjustment:

• Press button twice, is displayed and the current temperature setting flashes.

• Press - or + to set a temperature between 38°c to 87°c.

• The display will default to normal after 5 seconds if no buttons are pressed.

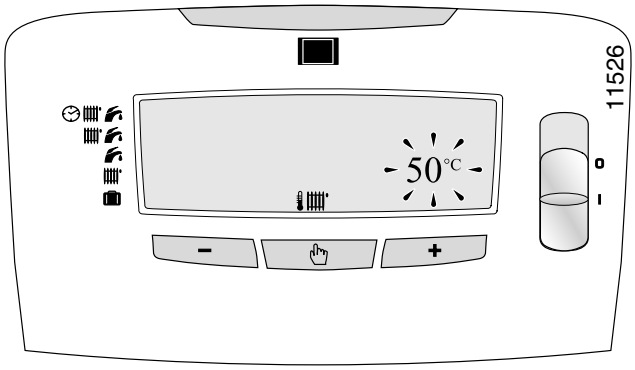

5. Heating Mode select:

• Press button three times, **MODE** is displayed and ◀ will flash along side the current mode setting.

• Press - or + to set as required.

• The display will default to normal after 5 seconds if no buttons are pressed.

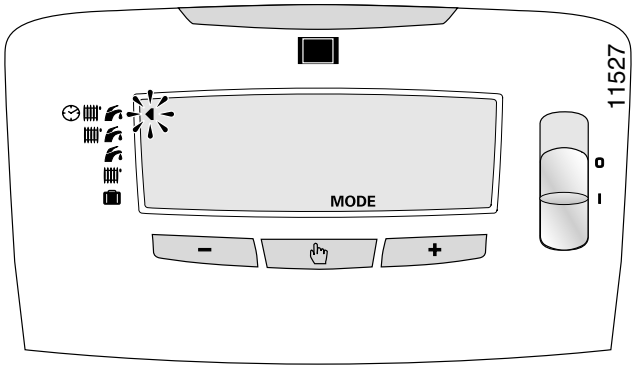

6. Long absence / Holiday mode:

• This mode protects the boiler against frost

7. If a fault occurs:

• The green running light will change to a red flashing light and the display will flash the letter **'F'** with the type of fault.

• **Reset the boiler:** Switch the boiler **OFF (0)**, wait for five seconds. Switch the boiler **ON (I)**, the boiler is reset. If the fault continues call your Installation/Servicing company or Heatcall using the telephone number on the inside front cover of this literature.

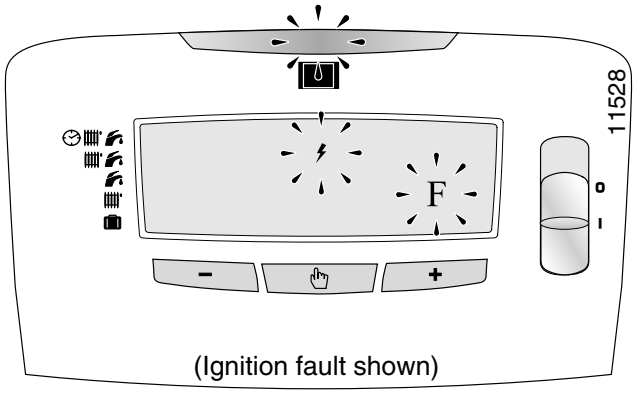

(Ignition fault shown)

8. Installation filling:

• **If the boiler loses water:** The green running light will change to a red flashing light and the display will flash the letter **'F'** with the low system water pressure fault and the current system pressure.

• Fill the system by the filling device at the bottom of the boiler until the pressure gauge reads 1.0 bar.

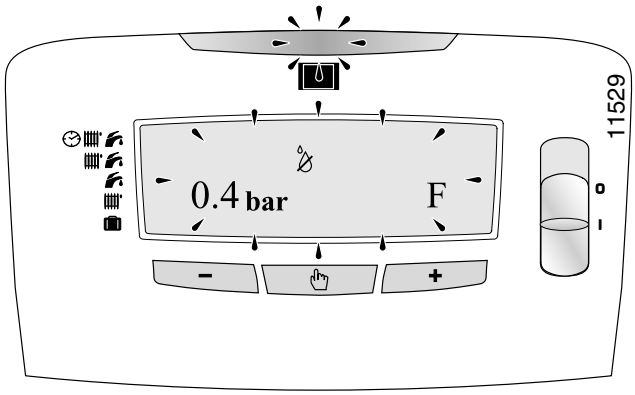

• **Warning: Take care not to overfill the boiler.** At a pressure of 2.5 bar or above the high system water pressure fault will be displayed. The pressure must be reduced to 1.0 bar by opening the drain valve, **see diagram 1**. If the fault continues call your Installation/Servicing company or Heatcall using the telephone number on the inside front cover of this literature.

Setting the time.

Make sure there is an electrical supply to the boiler and the boiler is switched **ON (I)**.

Press button four times, is displayed and the time will flash, press **-** or **+** to set the correct time (24hr clock).

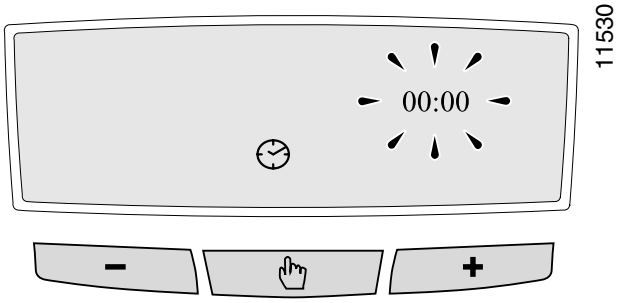

Setting the day.

Press button five times, is displayed and the current day setting will flash, press **-** or **+** to set the correct day.

1=MON, 2=TUE, 3=WED, 4=THU, 5=FRI, 6=SAT, 7=SUN

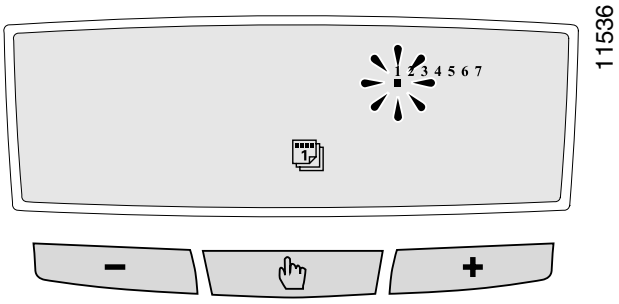

Setting the programmer.

Press button six times, **PROG** is displayed.

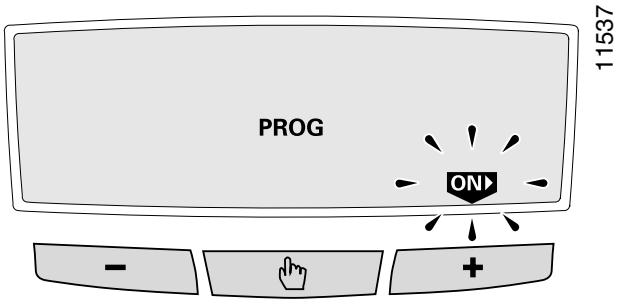

press **"+"** and **ON**, **PROG** and the will be displayed along with 0 to 24 hour ON / OFF settings and 1 to 7 days of the week.

Set ON / OFF times at 30min intervals for each day 1 to 7 of the week.

A flashing square is displayed below the current day of the

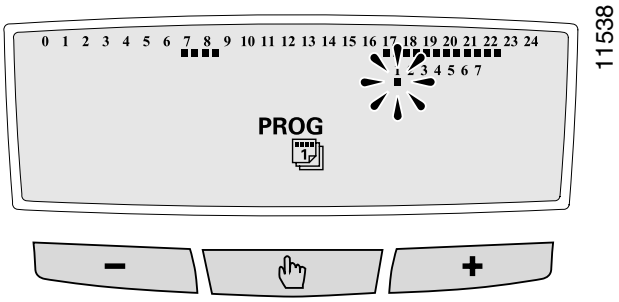

week selected, Press **-** or **+** to select the day 1 to 7 to be set.

Press to set **ON / OFF** times, **PROG** and are displayed, a flashing square will now be displayed below the **0** along the top of the display along with the corresponding time **00:00**$_{OFF}$ to the right of the display, this indicates that **00:00** to **00:30** is set to **OFF**, to set this to **ON** press **+** **ON**, or to set

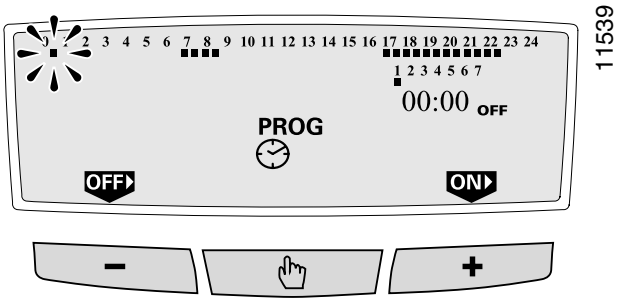

to **OFF** press **-** **OFF**, continue setting the **ON / OFF** times for the remainder of that day / 24hr period in 30min intervals.

Press , **PROG** and is displayed, press **+** to select the next day or **-** to select the previous day to be set, continue setting the remaining days as required.

The display will default to normal after 60 seconds if no buttons are pressed.

1 Technical Data

Heating	F24E PLUS	F30E PLUS
Heat input (max) NET Q	25,9 kW	32,6 kW
	88,370 BTU/H	111,231 BTU/H
Heat input (min) NET Q	12,3 kW	12,5 kW
	41,967 BTU/H	42,650 BTU/H
Heat output (max) GROSS P	23,6 kW	29,6 kW
	80,523 BTU/H	100,995 BTU/H
Heat output (min) GROSS P	10,6 kW	10,3 kW
	31,731 BTU/H	35,144 BTU/H
Efficiency - Sedbuk D	78,3%	79,6%
Maximum heating temperature	87° C	87° C
Expansion vessel effective capacity	6,5 l	8 l
Expansion vessel charge pressure	0,5 bar	0,5 bar
Maximum system capacity at 75°C	125 l	156 l
RED Safety valve, maximum service pressure	3 bar	3 bar

Hot water	F24E PLUS	F30E PLUS
Heat input (max) NET Q	25,9 kW	32,6 kW
	88,370 BTU/H	111,231 BTU/H
Heat input (min) NET Q	12,3 kW	12,5 kW
	41,967 BTU/H	42,650 BTU/H
Heat output (max) GROSS P	23,6 kW	29,6 kW
	80,523 BTU/H	100,995 BTU/H
Heat output (min) GROSS P	10,6 kW	10,3 kW
	31,731 BTU/H	35,144 BTU/H
Maximum hot water temperature	65° C	65° C
Minimum hot water temperature	38° C	38° C
Specific flow rate (for 30° C temp rise)	11,3 l/min.	14,1 l/min.
Threshold flow rate	1,7 l/min.	1,7 l/min.
Maximum supply pressure	10 bar	10 bar
Minimum supply pressure	0,5 bar	0,5 bar
BLUE Safety valve,	10 bar	10 bar

Combustion	F24E PLUS	F30E PLUS
Products outlet diameter	60 mm	60 mm
Fresh air inlet diameter	100 mm	100 mm
Combustion products values	CO (24 ppm)	CO (40 ppm)
	CO2 (6,9%)	CO2 (7,6%)
	NOx (99ppm)	NOx (81ppm)

Net lift weight (boiler only)
39 kg (F24E) 41 kg (F30E)

Gross lift weight (boiler and packaging)
41 kg (F24E) 43 kg (F30E)

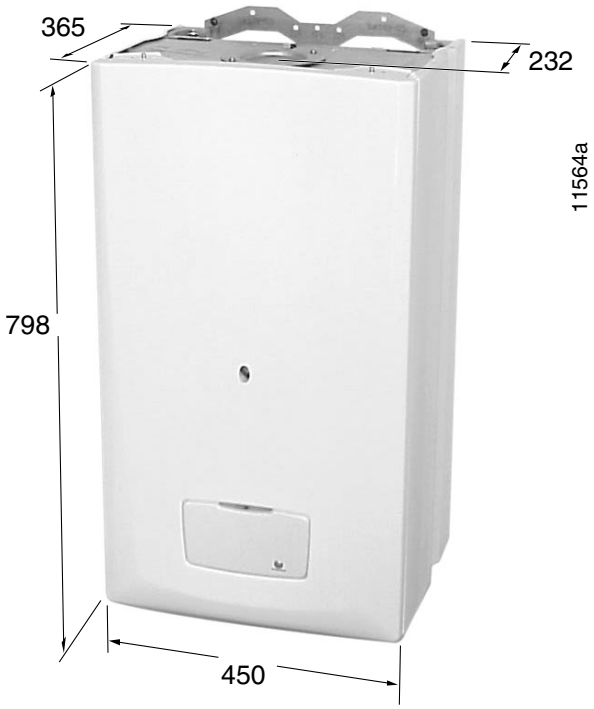

The **Themaclassic F24E Plus and Themaclassic F30E Plus**
is delivered in two separate packages:
- The boiler hanging bracket and isolating valves.
- The flue system

Diagram 1.1

Electrical	F24E PLUS - F30E PLUS
Electrical supply	230 V ~ 50Hz
Electrical rating	105 W(F24E) 135 W(F30E) fused at 3A
Level of protection	IPX4D
Fuse rating	1,25mA

Natural Gas (G20)	F24E PLUS	F30E PLUS
Ø Burner injector	1,2 mm	1,2 mm
Inlet pressure	20 mbar	20 mbar
Maxi. Burner pressure	12,5 mbar	13,3 mbar
Mini. Burner pressure	2,35 mbar	2,15 mbar
Gas rate maximum	2,74 m^3/h	3,45 m^3/h

Butane Gas (G30)	F24E PLUS	F30E PLUS
Ø Burner injector	0,73 mm	0,73 mm
Inlet pressure	29 mbar	29 mbar
Maxi. Burner pressure	23,2 mbar	25,5 mbar
Mini. Burner pressure	4,5 mbar	3,73 mbar
Gas rate maximum	2,03 kg/h	2,57 kg/h

Propane Gas (G31)	F24E PLUS	F30E PLUS
Ø Burner injector	0,73 mm	0,73 mm
Inlet pressure	37 mbar	37 mbar
Maxi. Burner pressure	29,8 mbar	32,5 mbar
Mini. Burner pressure	5,7 mbar	4,7 mbar
Gas rate maximum	2,01 kg/h	2,53 kg/h

2 General Information

IMPORTANT NOTICE.

Where no British Standards exists, materials and equipment should be fit for their purpose and of suitable quality and workmanship.

Refer to Manual Handling Operations, 1992 regulations.

The installation of this boiler must be carried out by a competent person in accordance with the rules in force in the countries of destination.

Manufacturer's instructions must not be taken as overriding statutory requirements.

2.1 Sheet Metal Parts

WARNING: When installing the appliance, care should be taken to avoid any possibility of personal injury when handling sheet metal parts.

2.2 Statutory Requirements

The appliance is suitable only for installation in GB and IE and should be installed in accordance with the rules in force.

In GB the installation of the boiler MUST be carried out by a competent person as discribed in the following regulations:

Manufacturer's instructions, supplied.

The Gas Safety (Installation and Use) Regulations.

The appropriate Building Regulations, either The Building Regulations, The Building Regulations (Scotland), The building Regulations (Nothern Ireland).

The Water Fittings Regulations or Water Bylaws in Scotland. The Health and Safety at Work Act, Control of Substances Hazardous to Health (COSHH).

The Current I.E.E. Wiring Regulations.

Where no specific instructions are given, reference should be made to the relevant British Standard Code of Practice.

In I.E the installation must be carried out by a competent person and installed in accordance with the current edition of I.S. 813

"Domestic Gas Installations", the current Building Regulations and reference should be made to the current ETCI rules for electrical installation.

In GB the following Codes of Practice apply:

BS4814, BS5440 Part 1 and 2, BS5449, BS5546 Part 1, BS6700, BS6798, BS6891 and BS7074 Part 1 and 2, BS7478, BS7593, BS7671.

In IE: I.S.813, BS5546, BS5449, BS7074, BS7593.

Manufacturer's notes must not be taken as overriding statutory requirements.

BSI Certification

This boiler certificated to the current issue of EN 483 for performance and safety.

It is important that no alteration is made to the boiler, without permission, in writing, from Hepworth Heating Ltd.

Any alteration that is not approved by Hepworth Heating Ltd., could invalidate the warranty and could also infringe the current issue of the Statutory Requirements.

2.3 Gas Supply

The gas installation must be in accordance with the relevant standards.

In GB this is BS 6891.

In IE this is the current edition of I.S.813 "Domestic gas installation".

The supply from the governed meter must be of adequate size to provide a steady inlet working pressure of 20mbar (8in wg) at the boiler.

Important Notice

If your boiler has been converted to use L.P.G. Propane the following note applies:

Propane cylinders are under pressure and should never be stored or used indoors residentially.

They should only be kept outside.

Under no circumstances should L.P.G. Propane cylinders be fitted or stored in basement areas or boiler houses.

On completion, test the gas installation for soundness using the pressure drop method and suitable leak detection fluid, purge in accordance with the above standard.

3 Heating System Design

• The **Themaclassic plus** is for use with sealed central heating systems.

• Heating surfaces may consist of radiators, convectors or fan assisted convectors.

• The safety valves are an integral part of the boiler and cannot be adjusted.

• The circulation pump is integral with the boiler.

• Pipe sectional areas shall be determined in accordance with normal practices, using the output/pressure curve **(diagram 3.1).** The distribution system shall be calculated in accordance with the output requirements of the actual system, not the maximum output of the boiler. However, provision shall be made to ensure sufficient flow so that the temperature difference between the flow and return pipes be less than or equal to 20°C. The minimum flow is shown in Table 1.

The system can be fitted with a lockable balancing valve if necessary in the main flow or return pipes shown as **valve 'A' in diagram 3.2.**

• The piping system shall be routed so as to avoid any air pockets and facilitate permanent venting of the installation. Bleed fittings must be provided at every high point of the system and on all radiators.

• The total volume of water permitted for the heating system depends, amongst other things, on the static head in the cold condition. The expansion vessel on the boiler is pressurised at 0.5 bar and allows a maximum system volume of 156 litres for an average temperature of 75°C and a maximum service pressure of 3 bar. This pressure setting can be modified at commissioning stage if the static head differs. An additional expansion vessel can be fitted to the system if required, **see diagram 3.2.**

• Provision shall be made for a drain valve at the lowest point of the system.

• Where thermostatic radiator valves are fitted, not all radiators must be fitted with this type of valve, and in particular, where a room thermostat is installed.

• In the case of an existing installation, it is **ESSENTIAL** that the system is thoroughly flushed prior to installing the new boiler, Using a proprietary product such as Fernox or Sentinel. Contact

3 Heating System Design

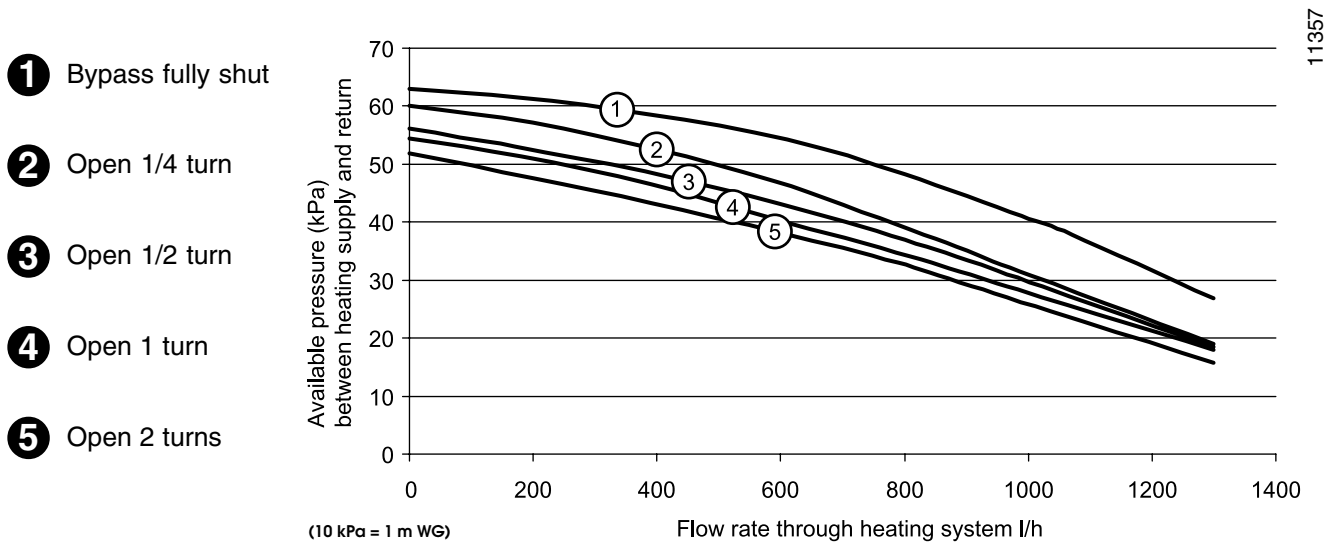

Diagram 3.1

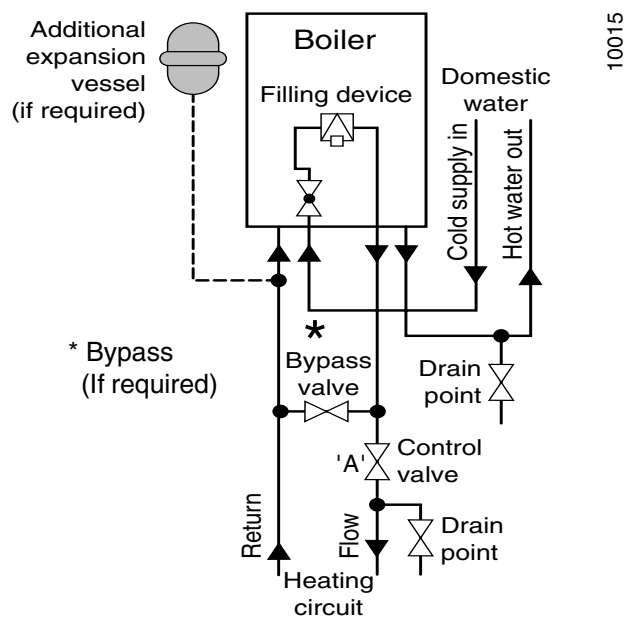

Diagram 3.2

the product manufacturers for specific details.

3.1 Bypass

•The boiler is fitted with an adjustable automatic bypass.

TABLE 1. FLOW RATE	
Model	Minimum flow rate
F 24 E plus	?
F 30 E plus	21.26 litres per minute
This is equal to 20°C differential at maximum heat input	

Ensure that under no circumstances does the flow rate drop below the figure specified, **see Table 1.**

• A bypass is not required on the central heating circuit unless the system controls could allow the boiler to operate when there is no flow.

• Where a bypass has to be fitted, the bypass must be placed at least 1.5 metres from the appliance, **see diagram 3.2.**

3.2 Filling the system

A filling device is fitted to the boiler to initially fill the system and replace water lost during servicing**, see the relevant parts of diagram 2 controls and lighting and diagram 3.2.**

4 Domestic Hot Water System Design

• Copper tubing or plastic Hep$_2$0 may be used for the domestic hot water system. Unecessary pressure losses should be avoided.

• Provision shall be made for a drain valve at the lowest points of the system.

• The flow restrictor must be fitted limiting the flow through the boiler to a maximum of 12 l/min (F30E Plus)
10 l/min (F24E Plus).

• The boiler will operate with a minimum supply pressure of 0,5 bar, at reduced flow rate.

Best operating comfort will be obtained from a supply pressure of 1 bar.

4.1 Hard Water Areas

In areas where the water is 'hard', more than 200mg/litre, it is recommended that a proprietary scale reducer is fitted in the cold water supply to the boiler.

5 Boiler Schematic

1 - Fan.
2 - Air pressure switch.
3 - Heat exchanger.
4 - Overheat thermostat.
5 - Combustion chamber.
6 - Expansion vessel.
7 - Flame sense electrode.
8 - Burner.
9 - Ignition electrode.
10 - Pump.
11 - Heating thermistor.
12 - Ignition unit.
13 - By-pass.
14 - Gas valve.
15 - Loss of water sensor.
16 - Domestic heat exchanger
17 - 3 way valve
18 - Domestic water flow sensor
19 - Filter cold water inlet
20 - Filling system
21 - Discharge safety valve (3bar)
22 - Drain valve
23 - Heating filter
24 - Domestic safety valve 10 bar
25 - Micro accumulation vessel thermistor
26 - Micro accumulation vessel
27 - Heating element

A - Heating return
B - Cold water inlet
C - Heating flow
D - Domestic hot water outlet
E - Gas

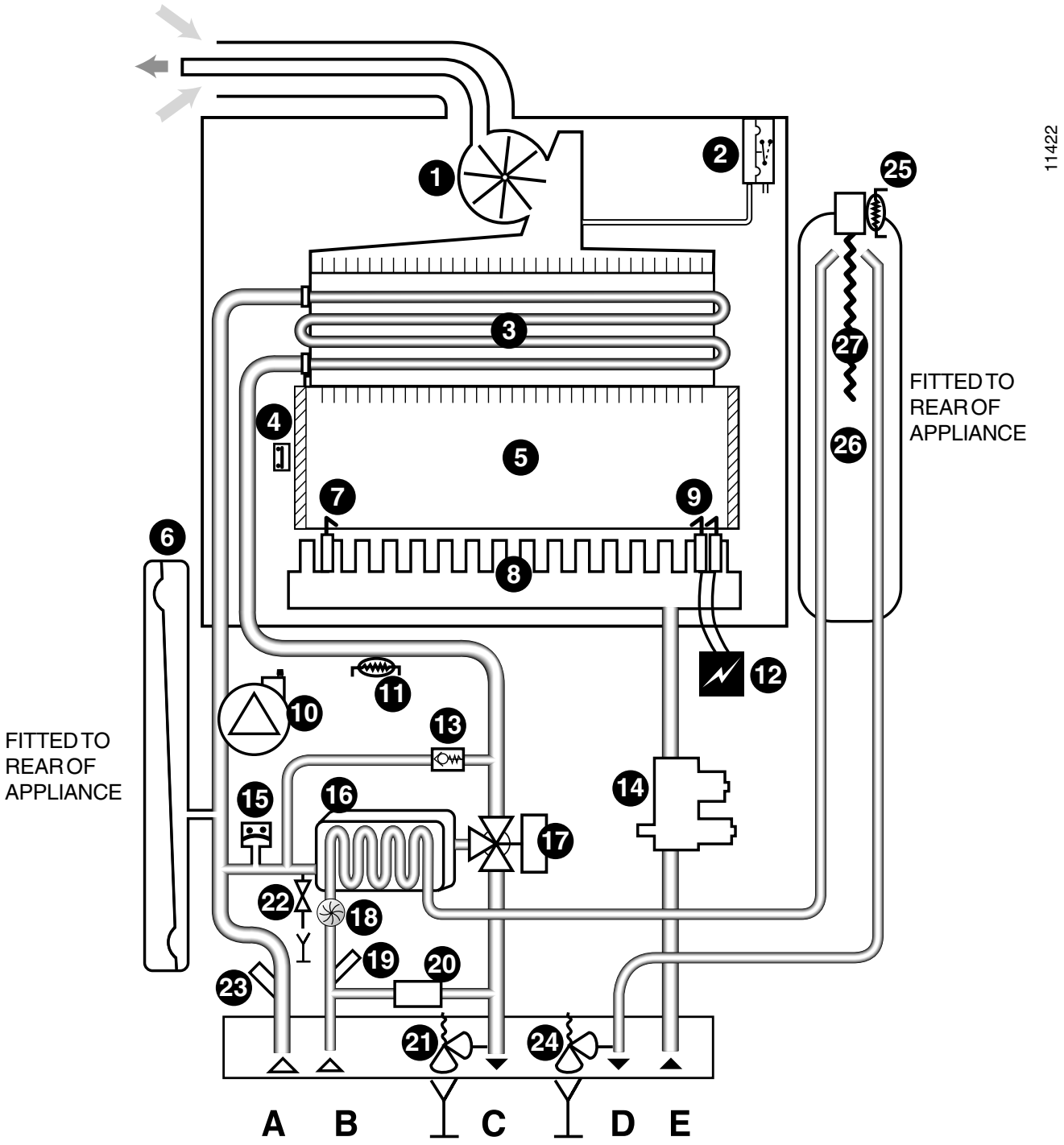

Diagram 5.1

6.1 Boiler Location

The recommended clearances are shown in **diagram 6.1.**

Note: The boiler must be mounted on a flat wall which is sufficiently robust to take its weight when full. If in doubt, expert advice should be obtained, in the event of the wall being found not suitable.

The minimum acceptable spacings from the terminal to obstructions and ventilation openings are shown in **diagram 6.2.** For Ireland the minimum distances for the flue terminal positionning must be those detailed in I.S.813 "Domestic Gas Installations".

The boiler must be installed so that the terminal is exposed to the external air.

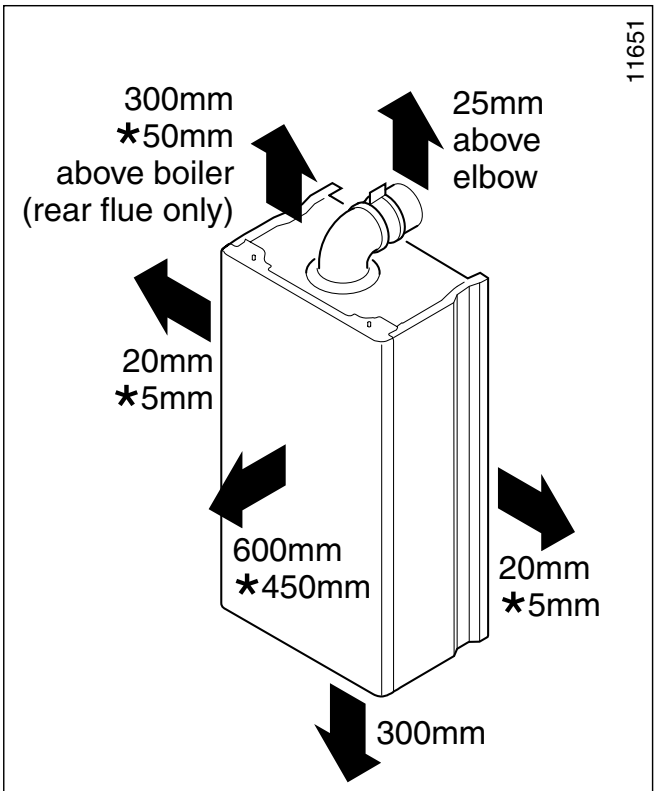

***Note:** It is permissible to install the boiler with smaller clearances than those quoted PROVIDING that consideration is given for Servicing/Repairs.

Diagram 6.1

6.2 Terminal guard, see diagram 6.3.

A terminal guard is required if persons could come into contact with the terminal or the terminal could be subject to damage.

If a terminal guard is required, it must be positioned to provide a minimum of 50mm clearance from any part of the terminal and to be central over the terminal.

A suitable terminal guard type K3 can be supplied by:

Tower flue components Ltd.
Morley road
Tonbridge
Kent
TN9 1RA

6.3 Flue options

There are various flue systems to choose from as follows:

Horizontal rear flue pack.

Horizontal telescopic top flue pack.

Horizontal top flue pack.

Horizontal extended flue pack.

Vertical flue pack.

Twin flue pack.

Extensions, 90° and 45° bends.

For detailed information refer to flue options guide. This is available from your nearest stockist.

6.4 Cupboard or compartment ventilation

The boiler can be fitted in a cupboard or compartment without the need for permanent ventilation.

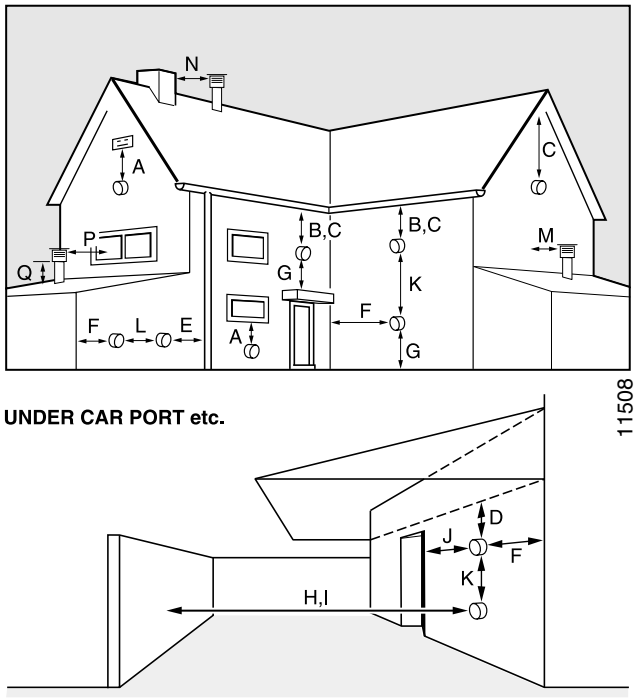

MINIMUM SITING DIMENSIONS FOR THE POSITIONING OF FLUE TERMINALS		MM
HORIZONTAL FLUES		
A	DIRECTLY BELOW, ABOVE OR HORIZONTALLY TO AN OPENING, AIR BRICK, OPENING WINDOWS, AIR VENT, OR ANY OTHER VENTILATION OPENING	300
B	BELOW GUTTER, DRAIN/SOIL PIPE	75
C	BELOW EAVES	200
D	BELOW A BALCONY OR CAR PORT	200
E	FROM VERTICAL DRAIN PIPES AND SOIL PIPES	150
F	FROM INTERNAL/EXTERNAL CORNERS OR TO A BOUNDARY ALONGSIDE THE TERMINAL	300
G	ABOVE ADJACENT GROUND OR BALCONY LEVEL	300
H	FROM SURFACE OR A BOUNDARY FACING THE TERMINAL	600
I	FACING TERMINALS	1200
J	FROM OPENING (DOOR/WINDOW) IN CAR PORT INTO DWELLING	1200
K	VERTICAL FROM A TERMINAL	1500
L	HORIZONTALLY FROM A TERMINAL	300
VERTICAL FLUES		
M	FROM ADJACENT WALL TO FLUE	300
N	FROM ANOTHER TERMINAL	600
P	FROM ADJACENT OPENING WINDOW	1000
Q	ABOVE ROOF LEVEL	300

Diagram 6.2

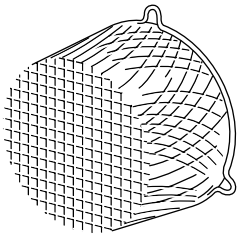

Diagram 6.3

7 Fixing Jig

The fixing jig is made up as follows:
A - Heating return fitting with isolating valve.
B - Cold water inlet fitting with isolating valve.
The cold water inlet restrictor supplied with boiler is fitted when the boiler is installed. Refer to Section 9.
C - Heating flow fitting with isolating valve.
D - Domestic hot water outlet.
E - Gas service cock.

Other components within the fixing jig pack.
F - Hanging bracket
G - wall template
J - sealing washers and screws

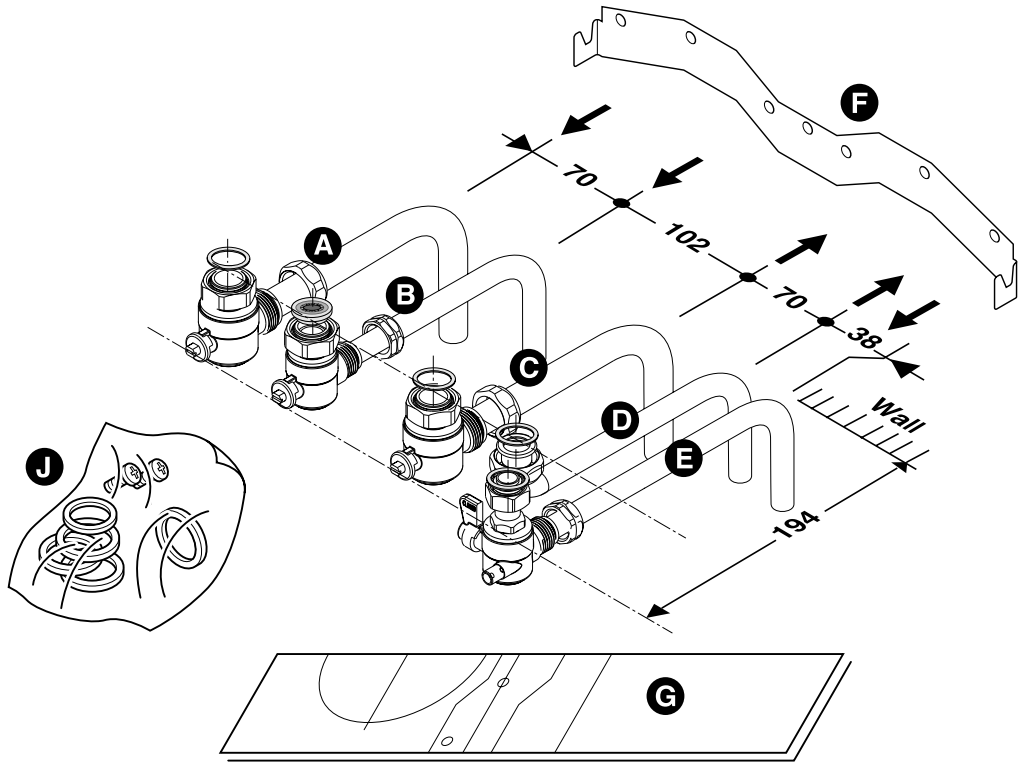

Diagram 7.1

8.1 Cutting the flue hole

• Remove the wall template, follow the instructions given on the wall template.

• Position the wall template, taking due regard of the minimum clearances for the selected flue application, **see diagram 8.1.**

• Horizontal Rear hole cutting

• Mark position of Rear flue outlet hole from template, then remove template, before cutting, for use, later. The core drill used should be 115 mm diameter.

• Top Outlet Side / Rear hole cutting

• Mark the centre line for the hole on the wall. Extend the horizontal centre line to the side wall if required and mark the vertical centre line of the hole as shown in **diagram 8.1**.

• Making allowance for the slope of the flue, cut hole in wall, preferably using a core drill. For installations with internal and external access use a 105mm diameter core drill. For installations with only internal access use a 125mm diameter core drill.

IMPORTANT NOTE: When cutting the flue hole and when extending the flue centre line to a side wall, remember that the flue system must have a fall of about 35mm per metre of flue downward towards the terminal. There MUST never be a downward incline towards the boiler.

Note: If the appliance is not to be fitted for some time, cover the hole in the wall.

8.2 Rear Flue - Internal Installation Only

Refer to "Horizontal Rear Flue" instructions, section 10 and prepare the flue system. Insert the flue system into the hole such that it will not interfere with the appliance when lifting into position.

8.3 Fixing jig, refer to diagram 7.1

• IMPORTANT NOTE: Ensure that the hanging bracket is fitted to a flat and true wall area for correct alignment with the boiler.

Side Flue - Check the horizontal centre line and reposition the template if necessary.

Rear Flue - Reposition the wall template over the hole in wall.

• Mark the securing position holes.

• Check that the hanging bracket is level.

• Drill, plug and secure the bracket to the wall, using suitable screws (not supplied) for the wall type and capable of supporting the total weight of the appliance (refer to wall template for fixing points).

8.4 Water connection

IMPORTANT NOTE: Do not subject the isolating valves to heat from blowlamp, when making connection.

Connect the system pipework to the fixing jig connection pipes and the fixing jig isolating valves, observing the correct flow and return as shown in **diagram 8.1.**

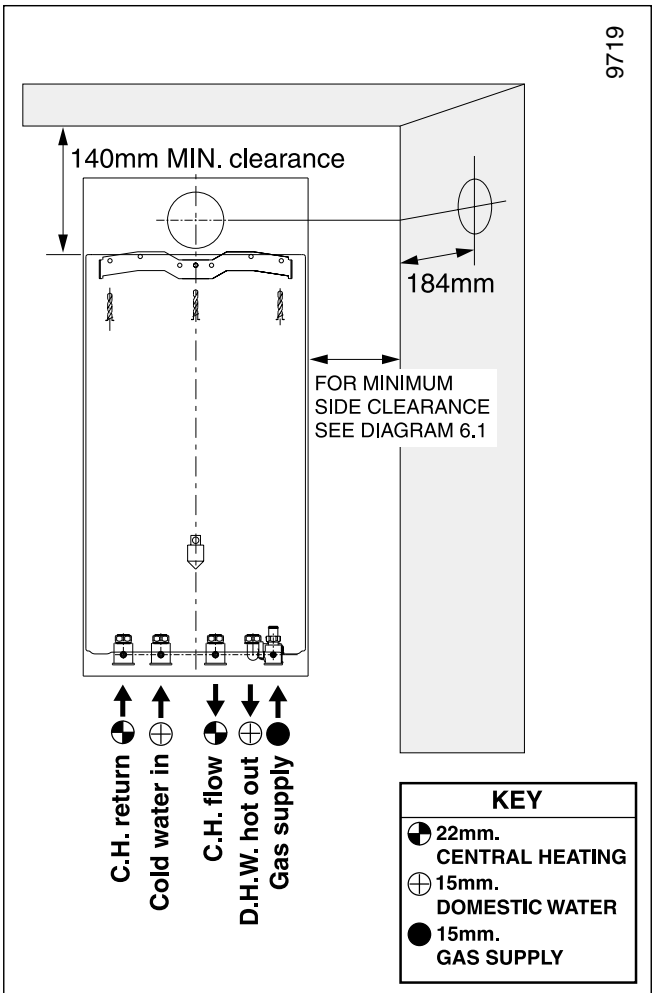

Diagram 8.1

8.5 Gas connection

Gas Safety (Installation and use) Regulations

In your interests and that of gas safety, it is the law that ALL gas appliances are installed and serviced by a competent person in accordance with the above regulations.

• The whole of the gas installation, including the meter, should be inpected, tested for soundness and purged in accordance with the current issue of BS6891 and in IE the current edition of I.S.813 "Domestic Gas Installations".

9.1 Sheet metal parts

WARNING: When installing or servicing this boiler, care should be taken when handling the edges of sheet metal parts to avoid the possibility of personal injury.

9.2 Installing the boiler

IMPORTANT NOTE: The system must be thoroughly flushed using a propriety cleanser from Fernox or Sentinel to eliminate any foreign matter and contamination e.g. metal filings, solder particles, oil, grease etc.

Solvent products could cause damage to the system.

• Remove front panel, unscrew and remove the two retaining screws from the bottom of the front panel. Remove front panel by lifting up and forward.

• To remove the self adhesive wiring diagram label from the document envelope. Fit the self adhesive wiring diagram label to the inside of the front panel, put front panel in a safe place to avoid damaging it.

(Horizontal Rear Flue Only)

Note: Firstly remove the fan as described in section 10.3.

Fit the flue adaptor and gasket , refer to diagram 9.3, supplied in the flue pack to the rear of the appliance, having first moved and secured the blanking plate to the top outlet.

• If fitted ensure the plastic plugs are removed from water and gas pipes. NOTE: There will be some spillage of water.

• Fit the cold water inlet restrictor (supplied in the document envelope) into cold water inlet isolating valve, **see diagram 7.1.**

Important Note. With regards to the manual handling operations, 1992 regulations, the following operation exceeds the recommended weight for one man lift.

• Lift the boiler up and engage boiler onto the hanging bracket, refer to diagram 7.1.

• Fit the washers between the boiler and isolating valves, **see diagram 7.1.**

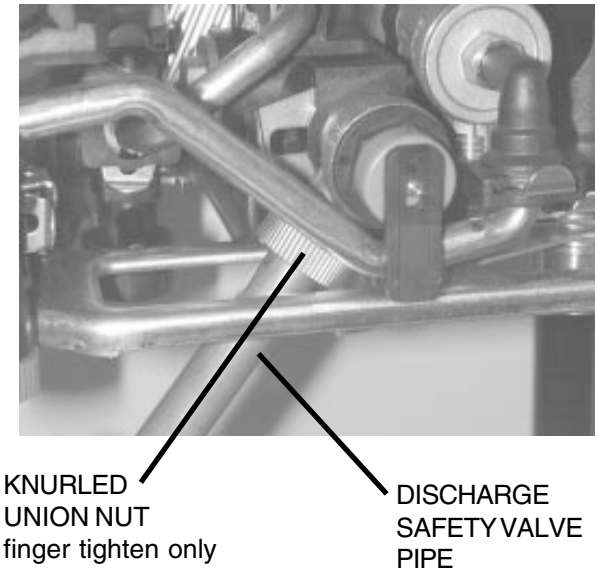

Diagram 9.1

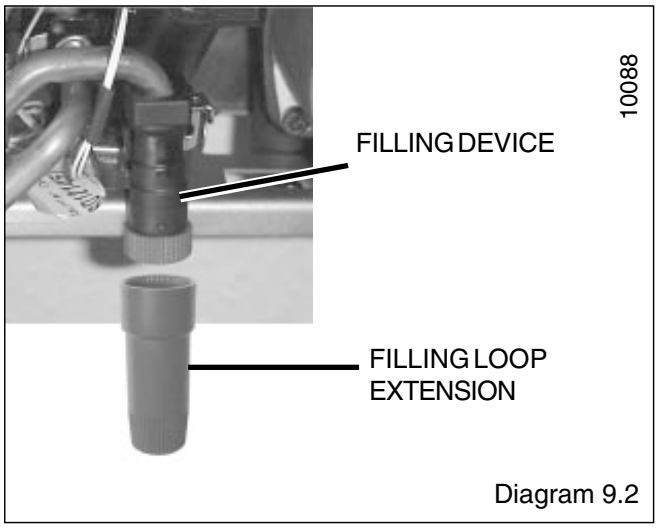

Diagram 9.2

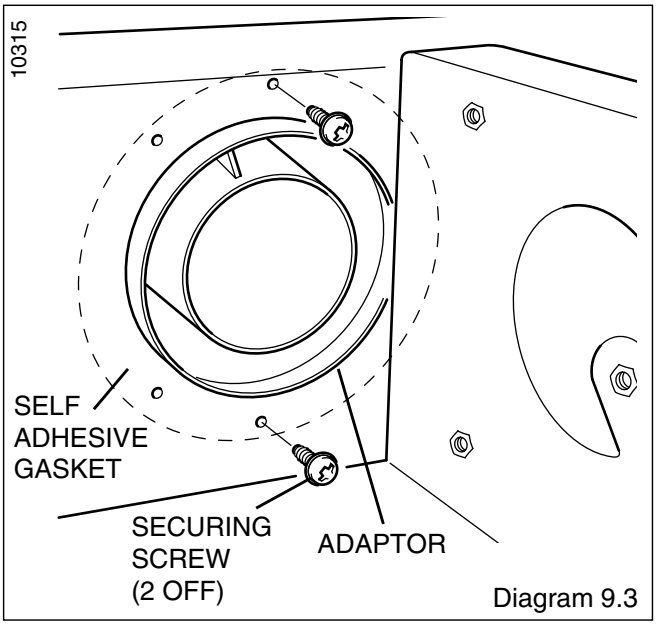

Diagram 9.3

9 Boiler Installation

9.3 Heating safety valve (3 bar RED) and domestic safety valve (10 bar BLUE) discharge, refer to diagrams 9.4.

Two short discharge pipes and washers are supplied in the fittings pack, fit these to the heating safety valve 3 bar and the domestic water safety valve 10 bar. The discharge must be extended using pipe not less than 15mm. od. to discharge in a visible position outside the building, facing downward preferably over a drain.

IMPORTANT NOTE: To facilitate servicing of the appliance, the discharge pipe MUST ONLY be extended using the compression fittings supplied.

The pipes must have a continuous fall and be routed to a position so that any discharge of water, possibly boiling or steam, cannot create any danger to persons, damage to property or external electrical components and wiring. Tighten all pipe connection joints.

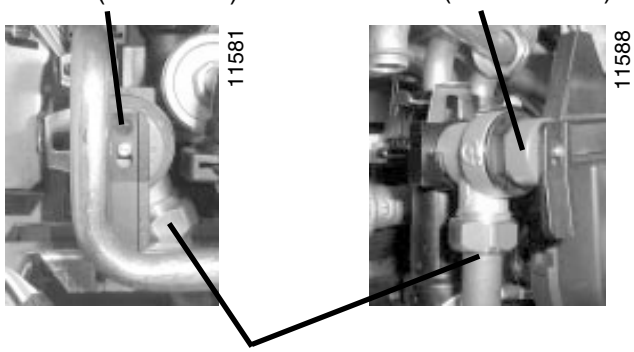

Diagram 9.4

9.4 Filling loop extension

The filling loop extension knob is supplied in the discharge safety valve pipe connection pack. Fit to the filling device on/off knob, this is a push fit, **see diagram 9.2.**

10 Horizontal Rear Flue Installation

The *Horizontal Rear flue* - kit No A2009700 is suitable for installations that require a flue length from 190mm minimum to 667mm maximum, without extensions, measurement taken from the rear of the boiler to outside wall face, see diagram 10.4 (3.).

If a longer flue length is required a 1metre pipe extension can be used to give a maximum flue length of no more than 1500, measurement taken from the rear of the boiler to outside wall face.

10.1 Horizontal Rear Flue kit of parts, refer to diagram 10.1.

10.2 Cutting Rear Flue, refer to diagram 10.2.

Important Notes: After cutting ensure that there are no burrs.

10.3 Installation of Rear Flue assembly

• Fit rubber sealing collar **(C)** into groove at the outer end of the flue assembly **(A)** and **(B), see diagram 10.3.**

• Fit flue assembly with attached rubber sealing collar into wall from the outside with rubber sealing collar to the outside. Pull assembly inwards to bring rubber sealing collar hard up against external wall. The oposite end must exit the inner wall face by **40mm. see diagram 10.4. (1.)**

• Fit the plastic internal flange **(G)** over the flue, push along the pipe until engaged against internal wall, **see diagram 10.4. (2.)**

• Remove the backing from one of the wrap around self adhesive seals **(D)** and carefully fit seal around the flue against the internal flange at the inner wall face, trim to fit, **see diagram 10.4. (2.)**

• Remove the backing from the other wrap around self adhesive seal **(D)** and carefully fit seal around the front end of the flue that is extending **40mm** from the inner wall face, trim to fit, **see diagram 10.4. (2.)**

• Fit the 'O' ring **(H)** into the adaptor **(F),** apply a small amount of silicone grease to the 'O' ring when fitting.

• Ease the adaptor **(F)** over the seals, **see diagrams 10.4 (3.) and 10.5.**

• Fit the adaptor sealing gasket **(G)** to the adaptor.

Preparing the boiler

• Lift the boiler up and engage boiler upper part onto the hanging bracket.

• Fit the washers between the boiler pipes and the inlet and outlet fittings on the fixing jig and connect the various couplings between the boiler and jig.

Now the boiler is on the wall, slide forward the adaptor about 20mm. secure it on to the back of the boiler with the two screws supplied in the fittings kit, **see diagram 10.6.**

• Engage the fan outlet into the adaptor, refit the fan, **see diagram 10.7.**

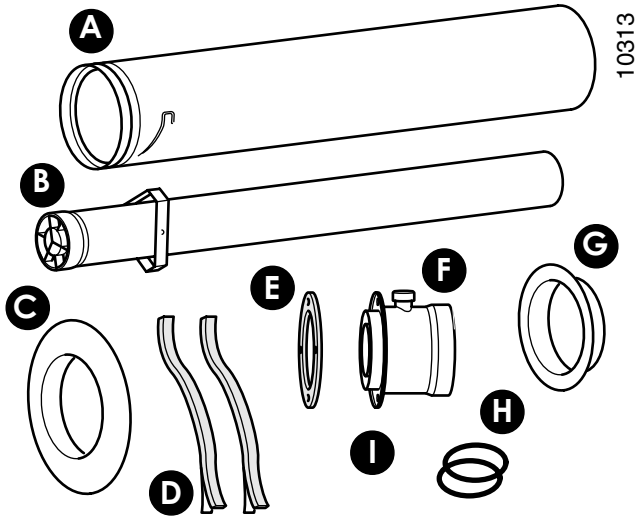

The combined kits A2009700 include
- Flue duct pipe ..... A
- Air duct pipe ..... B
- External rubber sealing collar C
- Self adhesive seals ..... D
- Adaptor sealing gasket ..... E
- Adaptor ..... F
- Internal flange ..... G
- 'O' rings ..... H
- Screws I

Horizontal Rear flue kit Diagram 10.1

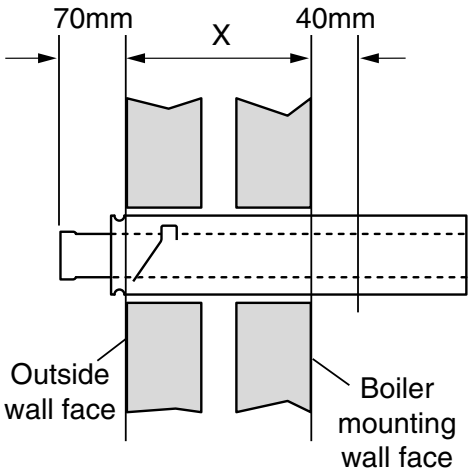

70mm. plus X = wall thickness **(75 min.)**
plus 40mm. = cutting length

Diagram 10.2

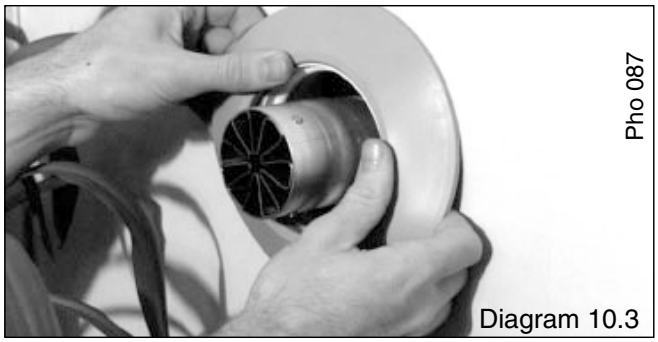

Diagram 10.3

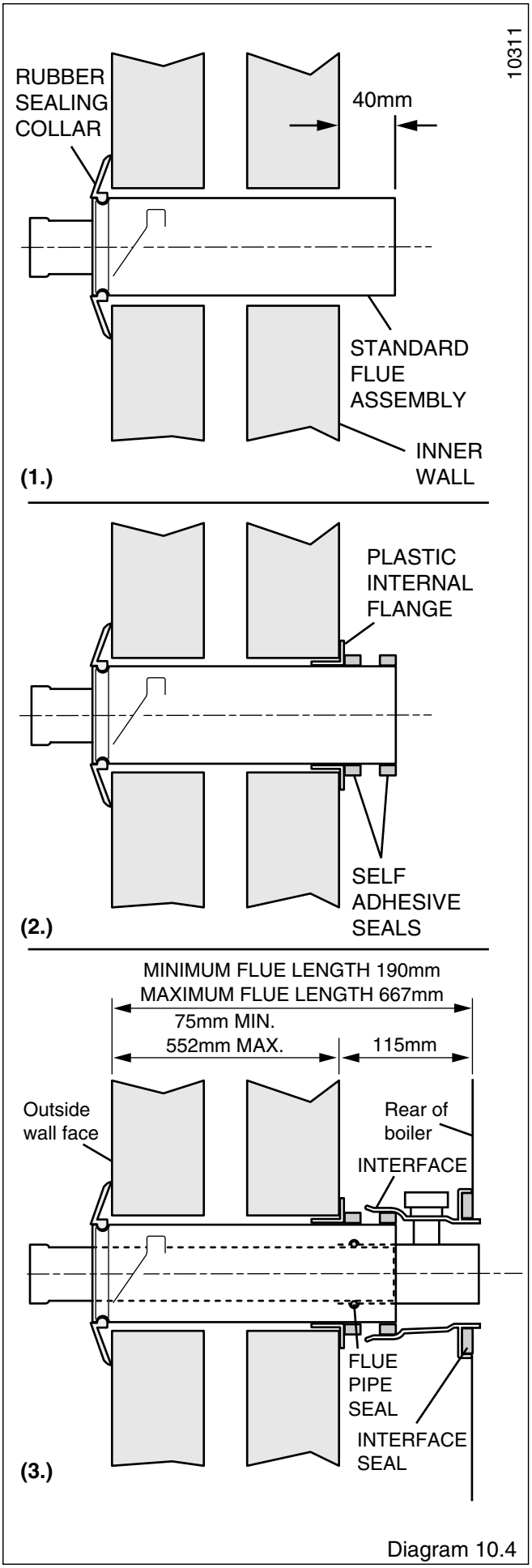

Diagram 10.4

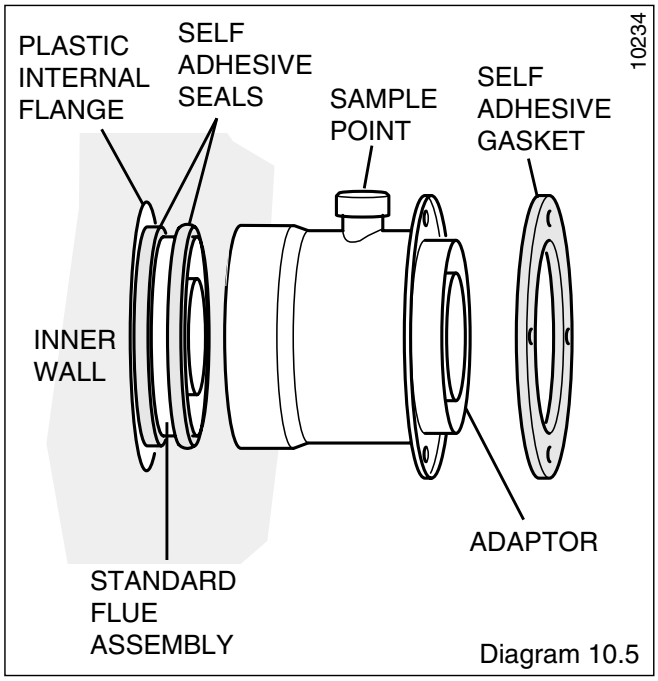

Diagram 10.5

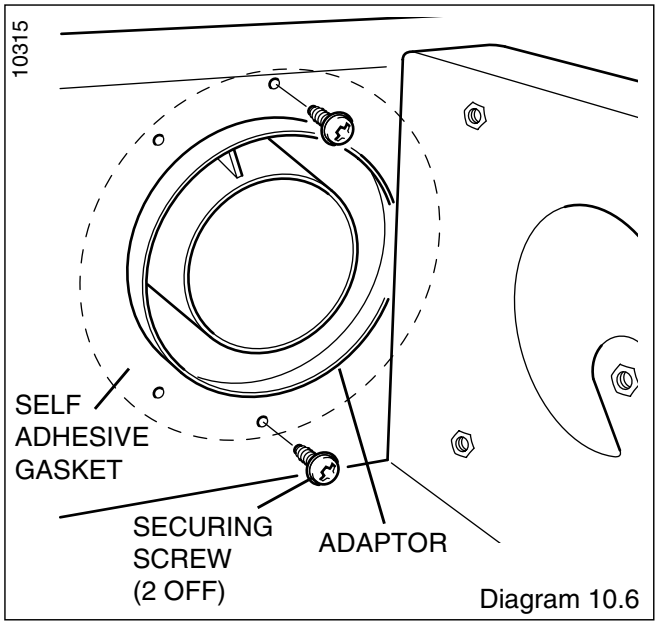

Diagram 10.6

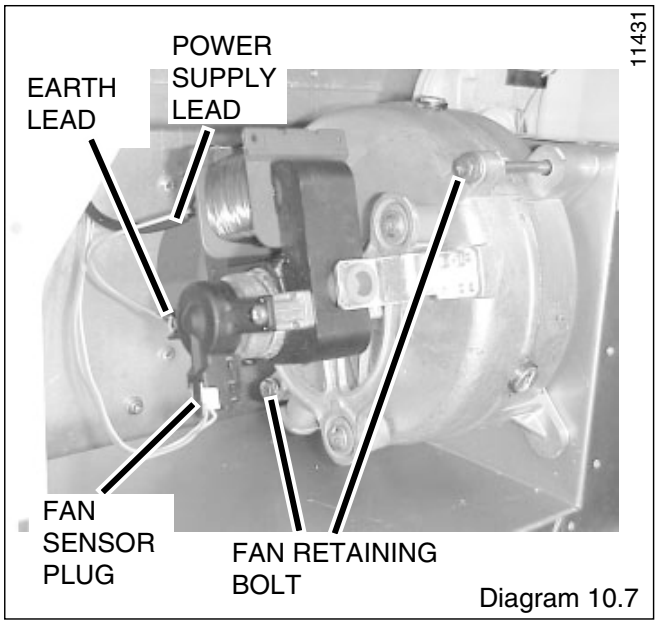

Diagram 10.7

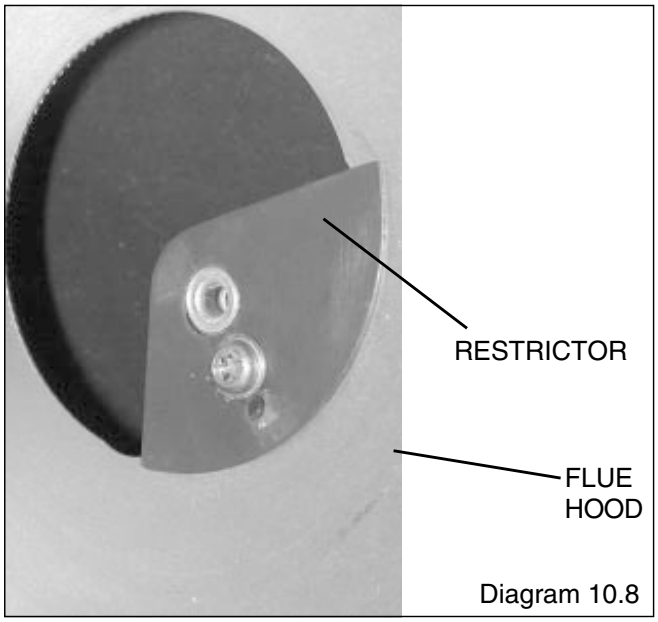

Diagram 10.8

10.4 Flue Hood Outlet Restrictor, refer to diagram 10.8

Secure restrictor, supplied with flue pack, to the flue hood as shown in diagram 10.8.

The *Horizontal Telescopic Top Flue,* Kit No. A2004500

Suitable for installations that require a flue length "L" from 430 minimum to 660 maximum. If longer flueing is required extensions and bends are available, see note below.

If the flue length, **see diagram 11.2.** is less than 430 'L' **Do Not** cut this flue but use the horizontal top flue 86285.

Note: Additional 1 metre extensions, 90° and 45° bends are available. The maximum extended flue is 3.5m. The use of flue bends requires the max extended flue lengths to be reduced by 1m. for 90° and 0.5m. for 45°.

11.1 Horizontal Telescopic Top Flue

Kit of parts, refer to diagram 11.1.

11.2 Horizontal telescopic flue system

Rear and side flue lengths and dimensions, see diagram 11.2.

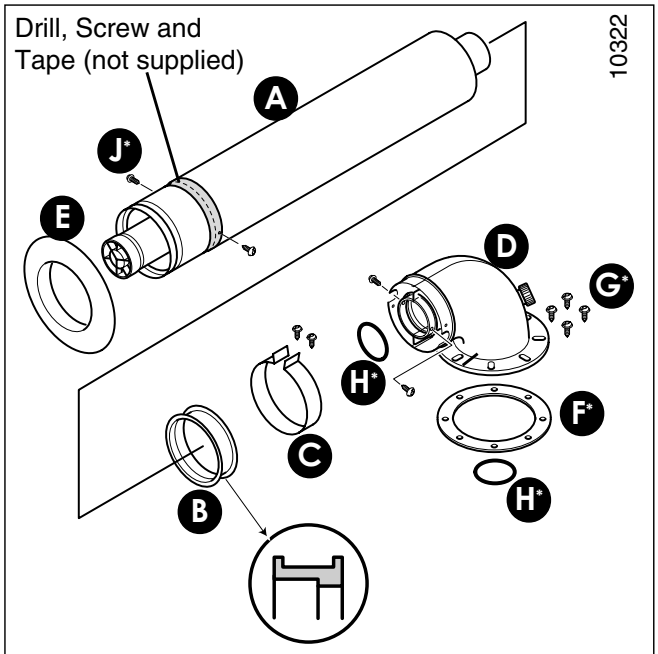

The flue kit A2004500 is 660 mm long and comprises:

- Telescopic flue assembly ..... A
- Fixing collar seal ..... B
- Fixing collar C
- Elbow ..... D
- External rubber sealing collar ..... E
- *Gasket ..... F
- *Screws 6 off ..... G
- *'O' rings ..... H
- *Screws 4 off ..... J

* supplied in plastic bag

Telescopic Top flue kit Diagram 11.1

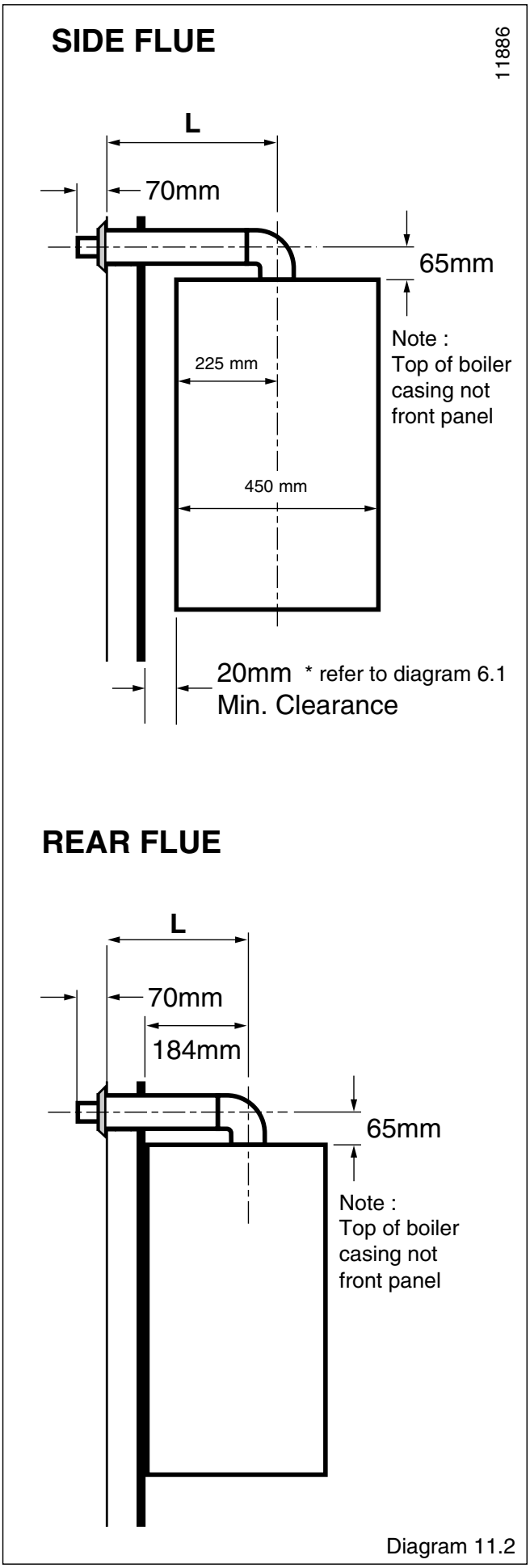

Diagram 11.2

11.3 Installation of telescopic flue assembly

• Remove the elbow **(D)** and the telescopic flue assembly **(A)** from the flue kit.

• **Refer to Step 1. diagram 11.3.** Fit the telescopic flue assembly **(A)** into the prepared hole in the wall. Position the elbow **(D)** on the boiler, do not secure. Position the telescopic flue assembly **(A)** as it would be fitted.

• **Refer to Step 2. diagram 11.3.** Remove the telescopic flue assembly **(A)** from the prepared hole in the wall, make sure the air duct is extended to its required length. The flue duct at the elbow end must protrude 25mm. Drill ,secure with two screws and tape to secure the air duct, take care not to drill the inner flue pipe. Fit the fixing collar seal **(B)** to the telescopic flue assembly **(A)**.

• **Refer to Step 3. diagram 11.3.** Fit the telescopic flue assembly **(A)** with the fitted fixing collar seal into the prepared hole in the wall. Remove the backing from the self adhesive gasket **(F)** and carefully fit gasket to base of flue elbow. Fit the 'O' rings **(H)** into the grooves in the flue ducts within the elbow **(D)**. Lubricate the 'O' rings with a suitable lubricant. Fit flue elbow **(D)** onto boiler and secure with the four screws **(G)**.

• **Refer to Step 4. diagram 11.3.** Fit rubber sealing collar **(E)**, into groove at the outer end of the air duct pipe **(A)**. Carefully pull flue duct pipe into the elbow **(D)**. (If the telescopic flue has been pulled apart care must be taken not to damage the 'O' ring on the flue duct when re-assembling). Secure with two screws **(G)**. Pull telescopic flue assembly **(A)** inwards to bring rubber sealing collar hard up against external wall.

• **Refer to Step 5. diagram 11.3.** Fit the fixing collar **(C)** using the two screws **(G)**.

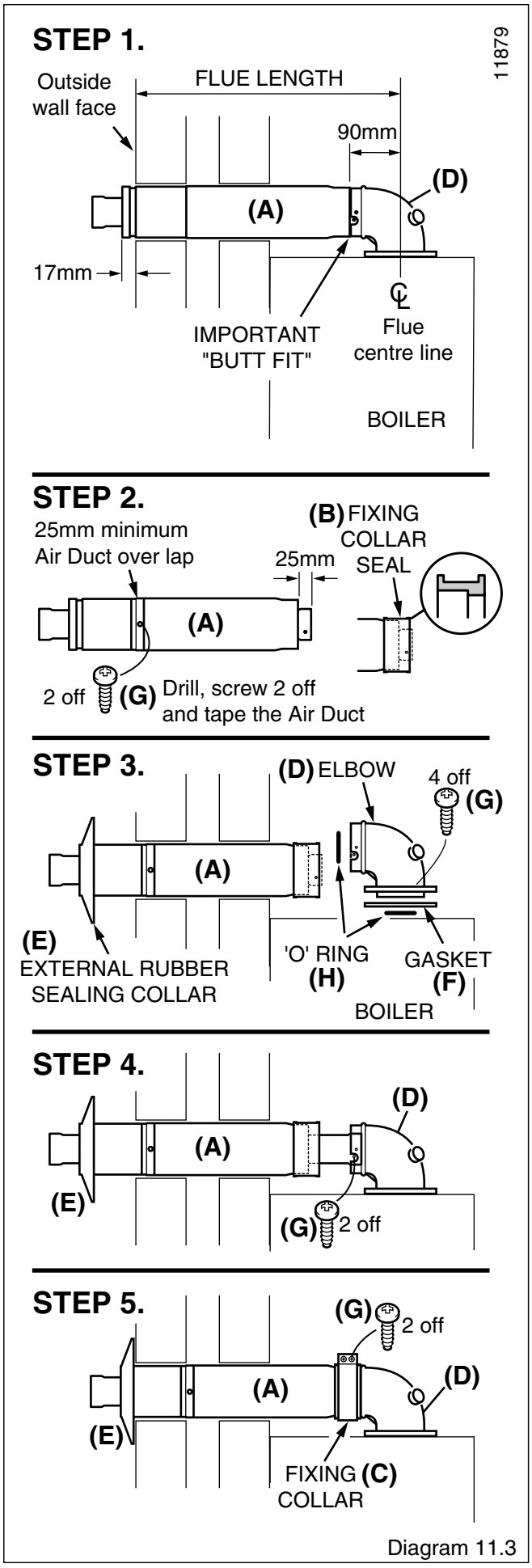

Diagram 11.3

12a.1 The *Horizontal Top flue* - kit 86285

Suitable for installations that require a max. flue length "L" of 740mm.

If a shorter flue length is required, the flue can be cut to a min. length"L" of 260mm rear or 300mm side. See diagram 12a.2 for min. flue lengths.

12a.2 Flue systems rear and side, refer to diagram 12a.1.

12a.3 Flue cutting, refer to diagram 12a.3.

Important: Do not leave any burrs or sharp edges on the cut ends of the pipes.

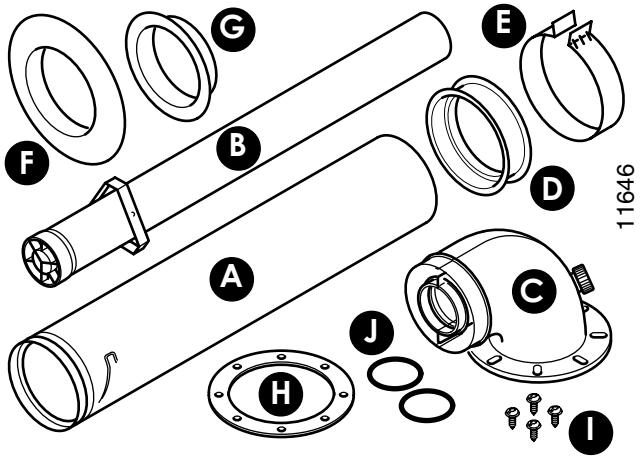

The flue kit 86285 is 810 mm long and comprises:

- Air duct pipe ..... A
- Flue duct pipe ..... B
- Elbow C
- Fixing collar seal ..... D
- Fixing collar ..... E
- External rubber sealing collar ..... F
- Internal flange ..... G
- Gasket ..... H
- Screws I
- 'O' rings ..... J

Horizontal Top flue kit Diagram 12a.1

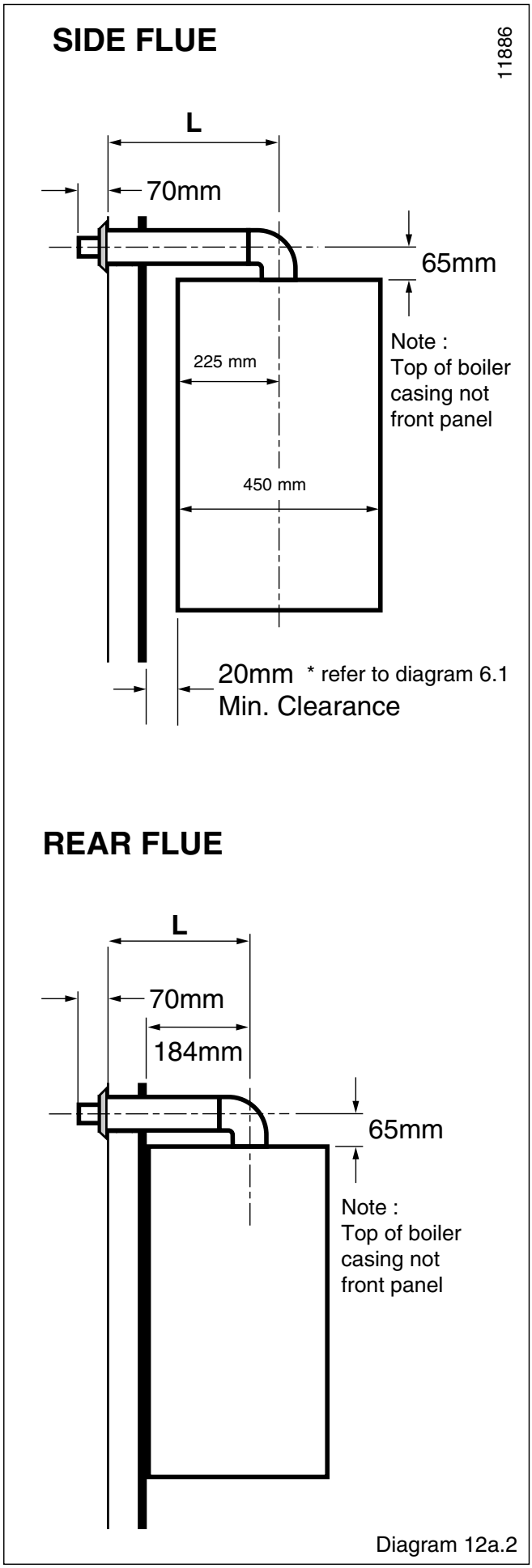

Diagram 12a.2

12a.4 Installation of horizontal top flue assembly

Important: If the flue has been cut, ensure that there are no burrs that could damage the 'O' ring.

• Remove the backing from the self adhesive gasket **(H)** and carefully fit gasket to base of elbow **(C)**.

• Fit both 'O' rings **(J)** into the flue elbow **(C),** one at the inlet, one at the outlet. By necessity, they are a loose fit, apply a small amount of suitable lubricant to each 'O' ring when fitting.

• Fit rubber sealing collar **(F),** into groove at the outer end of pipe **(A).**

• Insert flue duct pipe **(B)** into inner end of air duct pipe **(A)**, rotate flue duct pipe to locate into groove inside air duct pipe.

• Fit air/flue duct pipe assembly through the wall with rubber sealing collar to the outside.

• Fit internal plastic flange **(G)** onto air duct pipe **(A)**.

• Fit the fixing collar seal **(D)** onto the flue duct pipe **(B)** ensuring it is the correct way round (the larger diameter onto the pipe).

• Pull air/flue duct pipe assembly inwards to bring rubber sealing collar **(F)** hard up against external wall.

• Fit elbow onto boiler and secure with the four screws **(I).** Carefully push the fixing collar seal onto the elbow ensuring that the flue duct pipe locates into the flue elbow outlet while taking care not to tear the 'O' ring.

• Fit the fixing collar **(E)** around the fixing collar seal **(D)** and secure with 2 screws provided.

• Push the internal plastic flange **(G)** along the air duct pipe **(A)** until engaged against internal wall.

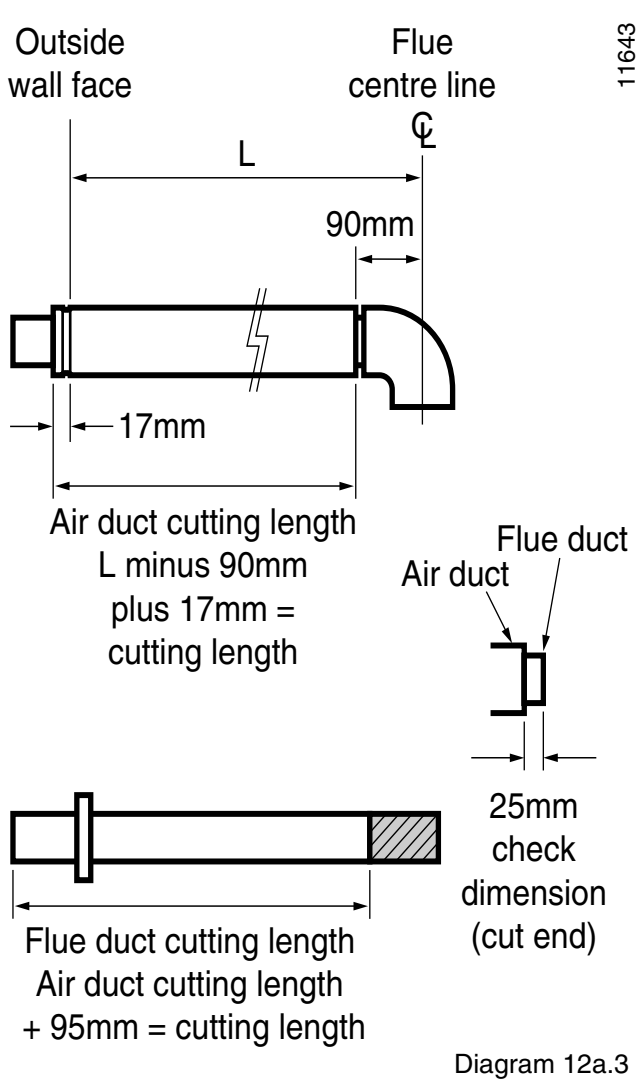

Diagram 12a.3

13 Electrical Connection

WARNING: This appliance must be earthed. This appliance must be wired in accordance with these instructions. Any fault arising from incorrect wiring cannot be put right under the terms of the Saunier Duval guarantee.

All system components must be of an approved type.

Electrical components have been tested to meet the equivalent requirements of the BEAB.

Do not interrupt the mains supply with a time switch or programmer.

Connection of the whole electrical system and any heating system controls to the electrical supply must be through a common isolator.

Isolation should preferably be by a double pole switched fused spur box having a minimum contact separation of 3mm on each pole. The fused spur box should be readily accessible and preferably adjacent to the boiler. It should be identified as to its use.

A fused three pin plug and shuttered socket outlet may be used instead of a fused spur box provided that:

a) They are not used in a room containing a fixed bath or shower.

b) Both the plug and socket comply with the current issue of BS1363.

13.1 Mains Cable

Important: If a replacement supply cable is required it must be purchased. Part No. S1008600.

13.2 Voltage Free External Controls

WARNING: UNDER NO CIRCUMSTANCES MUST ANY MAINS VOLTAGE BE APPLIED TO ANY OF THE TERMINALS ON THE VOLTAGE FREE HEATING CONTROLS CONNECTION TERMINAL.

This boiler will operate continuously on heating, as supplied, if the wire link (E), fitted between the two terminals of the heating controls connection, is left in place, **see diagram 13.1.**

External heating controls e.g. Room thermostat, should be fitted in accordance with the rules in force and as shown in the example, **diagram 13.2**.

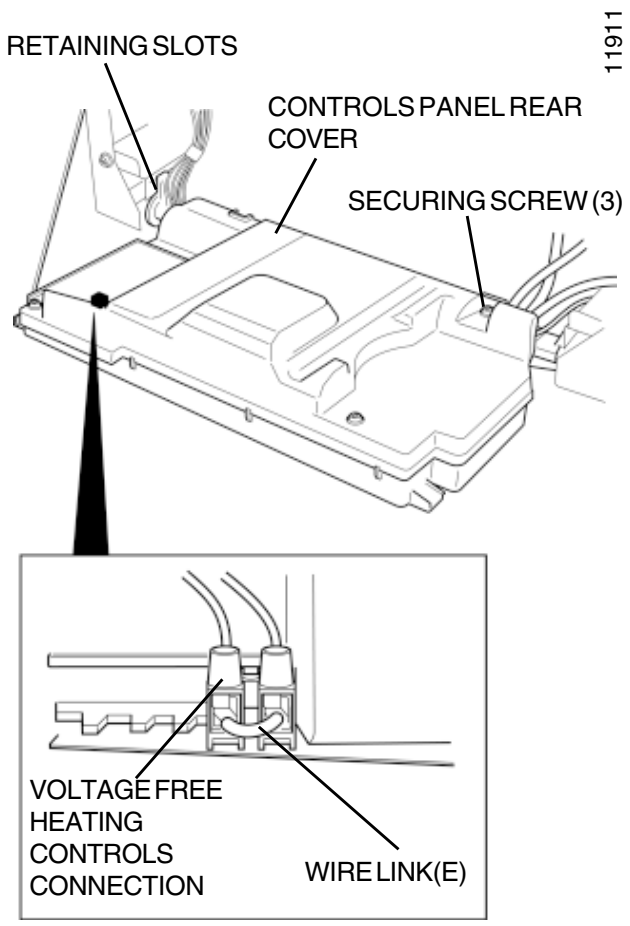

Diagram 13.1

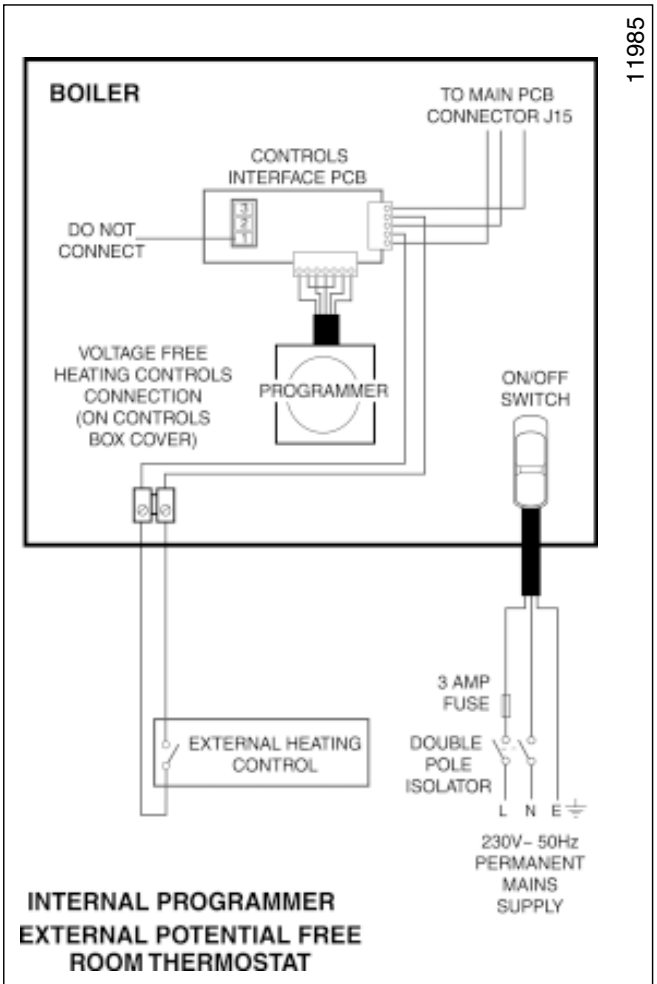

Diagram 13.2

13.3 Mains Voltage External Controls

WARNING: UNDER NO CIRCUMSTANCES MUST ANY MAINS VOLTAGE BE APPLIED TO ANY OF THE TERMINALS ON THE VOLTAGE FREE HEATING CONTROLS CONNECTION TERMINAL.

When mains voltage external controls are used, remove the MAINS VOLTAGE HEATING CONTROLS CONNECTION PLUG from the fittings pack and install on the control interface PCB as follows.

Gain access to the control interface by unclipping the fascia panel and hinging forward, see **diagram 13.3.**

Route the external heating controls cable (not supplied) and connect to the plug, see **diagram 13.3.**

Insert plug onto controls interface PCB, see **diagram 11.3.**

Close the fascia panel and remove the screws to open the rear cover of control panel, **see diagram 13.1.**

Secure the external heating control cable in the strain relief, and thread the cable through rear of the control panel and out of the cables exit, **see diagram 13.4.**

Close and secure rear cover of control panel.

IMPORTANT: Remove the wire link from the voltage free heating controls connector, **see diagram 13.1.**

Connect external heating controls as **diagram 13.5.**

External controls should be fitted in accordance with the rules in force.

13.4 Electrical Connections - Testing

Carry out preliminary electrical system checks as below:

1. Test insulation resistance to earth of mains cables.
2. Test the earth continuity and short circuit of cables.
3. Test the polarity of the mains.

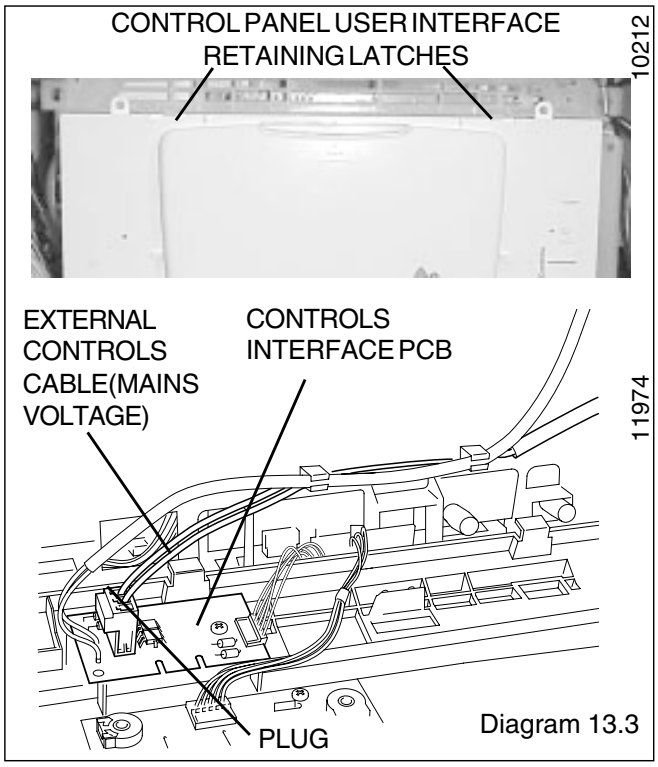

Diagram 13.3

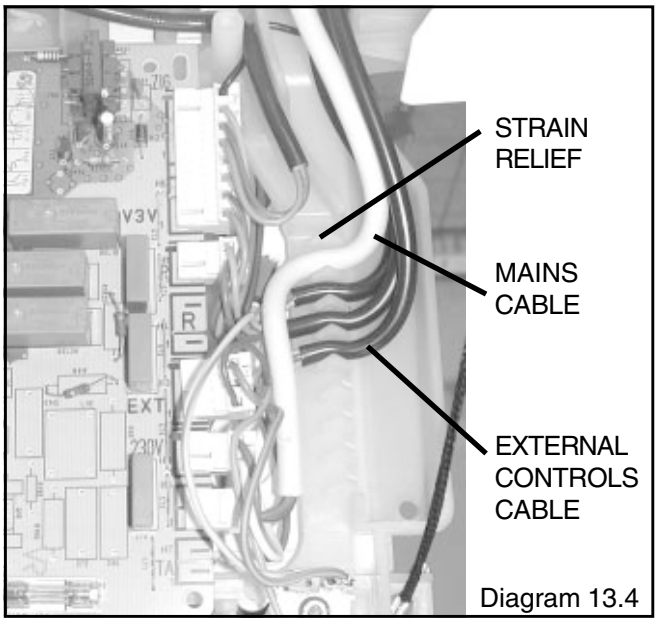

Diagram 13.4

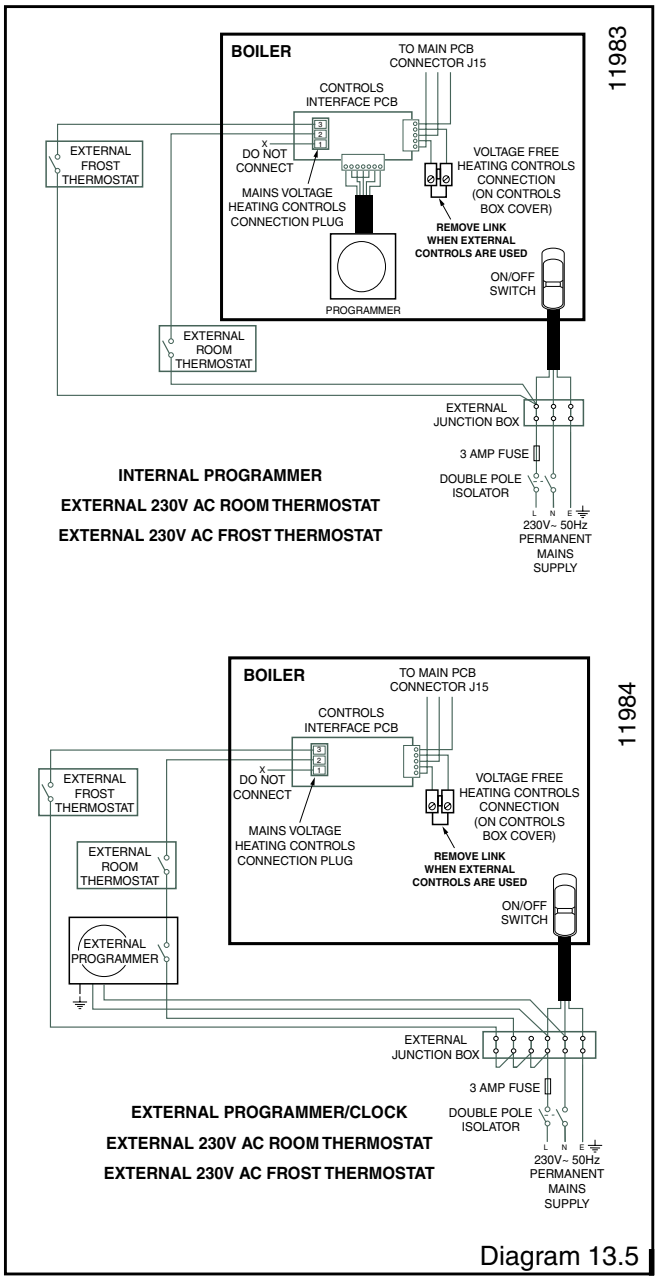

Diagram 13.5

14 Commissioning

Important: The commissioning and first firing of the boiler must only be done by a competant person.

Gas installation

If conversion from G20 to 30 or 31 is required, refer to section 13.

It is recommended that any air is purged from the supply at the gas purge point on the gas valve, see **diagram 14.1.**

Filling the system 1 to 8

1.

Make sure that:

- The boiler is connected to the electrical supply.
- The gas service cock is open.

Switch OFF (**0**)

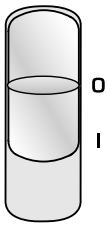

11445

Air in pipes

Important: A central heating system can not operate correctly unless it is filled with water and air bled from the system. If these conditions are not met the system may be noisy.

Bleed the air in the radiators and adjust the pressure if system requires. If the system requires filling to often this may be due to minor leaks or corrosion in the system.

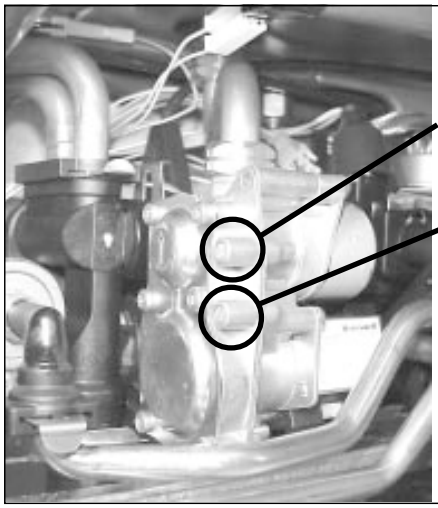

11547

Diagram 14.1

2. • Open the three water isolating valves.

Note: Isolating valves are shown in the: OFF position

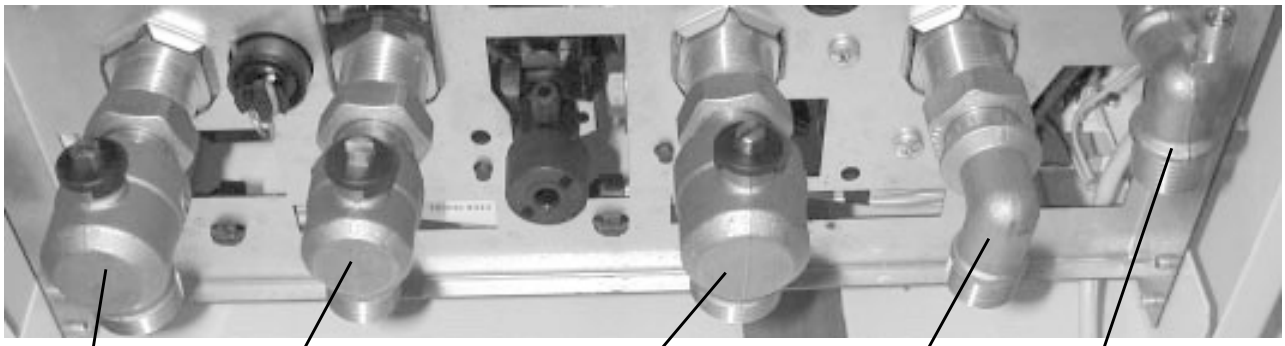

3.

- Undo cap on automatic air vent on top of pump and leave undone.

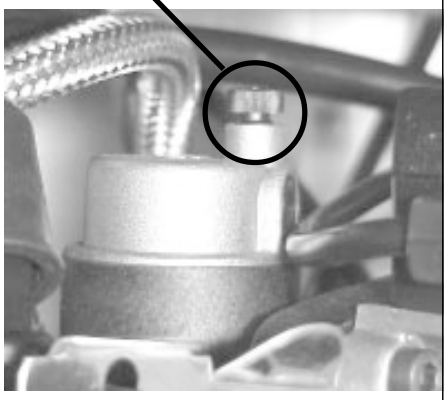

11548

4. • Turn the switch ON (**I**)

- Open the tap on the filling device
- Fill the system until the pressure indicated on the display is 1 bar. Close filling device.

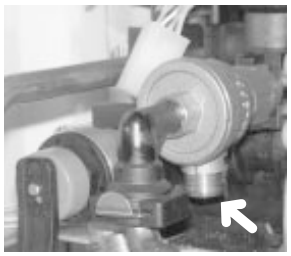

9792

NOTE: On initial fill there may be a small discharge of water from the Reduced Pressure Zone valve

5.

• Bleed each radiator to remove air, ensure all bleed screws are re-tightened.
• If necessary repressurise the system, refer to procedure 4

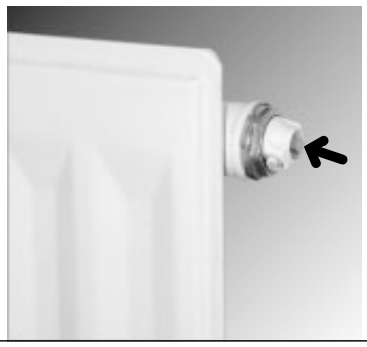

Ins 061a

6.

• Leave cap open on automatic air vent.

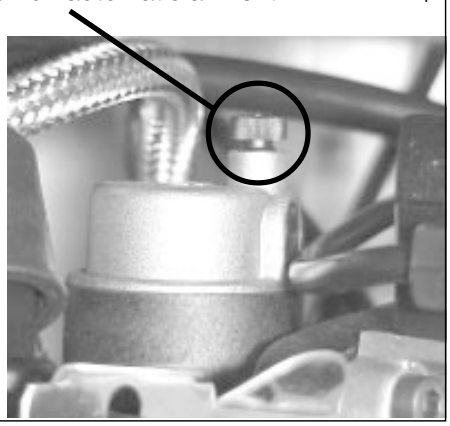

11548

7.

• Ensure the display indicates a system pressure of 1.0 bar adjust if necessary.

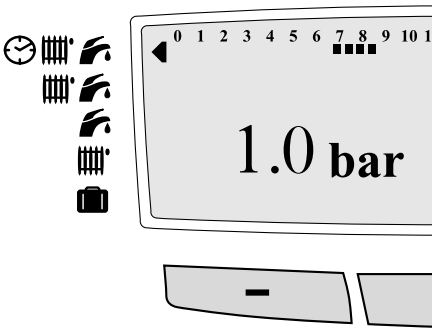

11524

8.

• Open various hot water taps to bleed system

Ins 062a

Adjust heating temperature to maximum.

• Check that any external controls, if fitted, are calling for heat (set room thermostat to maximum).

• Allow the temperature to rise to the maximum value, with all radiator valves open. The temperature rise will cause release of the air contained in the water of the central heating system.

• Air driven towards the boiler will be automatically released through the automatic air vent.

• The air trapped at the highest point of the system must be released by bleeding the radiators. Check the burner gas rate required, ten minutes from lighting. Refer to Data Label on electrical controls box. Should there be any doubt about the gas rate it should be checked at the meter.

On reaching maximum temperature, the boiler should be turned off and the system drained as rapidly as possible whilst still hot.

• Refill system to a pressure of 1.5 bar and vent as before.

• Restart boiler and operate until a maximum temperature is reached. If necessary, refer to page 30 to adjust the bypass. Shut down boiler and vent heating system. If necessary, top up heating system and make sure that a pressure of at least 1 bar is indicated when system is COLD.

Flush the domestic hot water system by opening the hot water taps for several minutes.

Completion

Remove the magnetic user instructions label from the document envelope and position it on the surface of the boiler casing.

Adjust the boiler temperature control and any system controls to their required settings.

For IE, it is necessary to complete a "Declaration of Conformity" to indicate compliance to I.S.813. An example of this is given in the current edition of I.S.813.

Please ensure the “Benchmark” logbook is completed and left with the user and the magnetic lighting instruction label is placed on the surface of the boiler casing.

Instruct the User

Instruct and demonstrate the lighting procedure and advise the user on the safe and efficient operation of the boiler.

Instruct on and demonstrate the operation of any heatingsystem controls.

Advise the user on the use and maintenance of any scale reducer and pass on any relevant instructional documents.

Advise that to ensure the continued efficient and safe operation of the boiler it is recommended that it is checked and serviced at regular intervals. The frequency of servicing will depend upon the installation conditions and usage, but in general, once a year should be enough.

Draw attention, if applicable, to the current issue of the Gas Safety (Installation and Use) Regulations, Section 35, which imposes a duty of care on all persons who let out any property containing a gas appliance in the UK.

It is the Law that any servicing is carried out by a competent person.

Advise the user of the precautions necessary to prevent damage to the system, boiler and the building, in the event of the heating system being out of use during frost or freezing conditions.

Advise the user that the permanent mains electrical supply SHOULD NOT be switched off, as the built in frost protection and pump saver program would not be operable.

Reminder, leave these instructions and the ‘Benchmark’ logbook with the user.

14 Commissioning

Bypass

The boiler has a built-in bypass, **see diagram 15.1.**

The boiler is supplied with the bypass open half a turn. It should not be necessary to adjust the bypass, but if required ensure that under no circumstances does the flow rate fall below the figures specified, **refer to Table 1. and diagram 1.1.** (turn clockwise to close the valve).

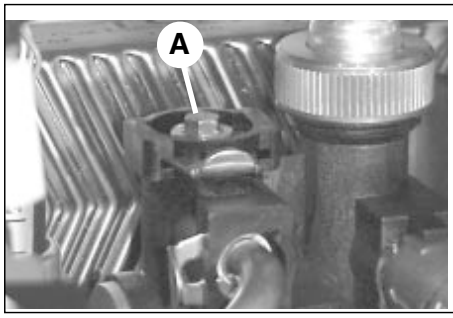

9718

Diagram 15.1

15 Boiler Settings

Boiler settings (for use by installers and Service Providers only)

❶ Press the button and keep pressed for 10 seconds. This gives access to both the operating parameters and the fault history.

❷ When the menu is shown on display, select **code 96** using button **+** or **-**.

❸ Press the button , to show the first menu to be adjust : Heating ouput

Note : The display will revert back to normal if no changes are made after 1 minute or if the button is again pressed for more than 10 seconds.

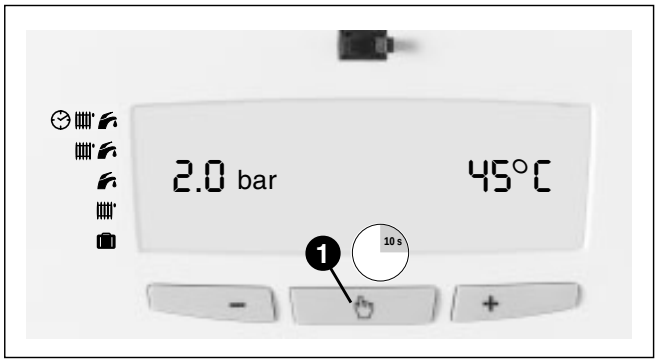

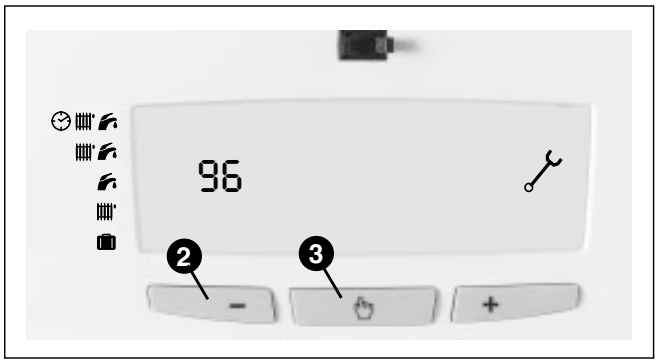

Parameter 1 : Setting the heating output
The maximum heating output of the boiler is adjustable between the maximum and minimum values given in the Technical Data section.

Factory setting

• When 1 flashing, press on if you want to adjust this menu.

• Use the heating **+** and **-** button to set the desired heating output in kW.
Note : Adjustment of the heating output does not affect the hot water output.

For kW to Btu/hr conversion refer to table :

kW	Btu/hr	kW	Btu/hr
10	34,120	20	68,240
12	40,940	22	75,060
14	47,770	24	81,890
16	54,590	26	88,710
18	61,420	28	95,540

Parameter 02 : Setting the flue parameters
This adjustment is made to ensure the boiler operates at maximum efficiency with longer flue lengths.

Factory setting

• Select a parameter between 0 and 10 according to the following table.

Flue parameter following flue length - Horizontal

Setting	Flue length for F 24 E	Flue length for F 30 E
0	0,3 m	0,3 m
1	0,7 m	0,6 m
2	1,2 m	0,9 m
3	1,6 m	1,3 m
4	2 m	1,6 m
5	2,3 m	1,9 m
6	2,7 m	2,2 m
7	3,1 m	2,5 m
8	3,3 m	2,9 m
9	3,8 m	3,2 m
10	4 m	3,5 m

Flue parameter following flue length - Rear

Setting	Flue length for F 24 E	Flue length for F 30 E
0		
1		
2		
3	0,3 m	0,3 m
4	0,6 m	0,6 m
5	0,9 m	0,9 m
6	1,2 m	1,2 m
7	1,5 m	1,5 m
8		
9		
10		

Flue parameter following flue length - Vertical

Setting	Flue length for F 24 E	Flue length for F 30 E
0	1,2 m	0,3 m
1	2,6 m	0,6 m
2	3,9 m	0,9 m
3	5 m	1,0 m
4	6,1 m	2,0 m
5	7,1 m	3,0 m
6	8,2 m	4,0 m
7	9,3 m	5,0 m
8	10,4 m	6,0 m
9	11,5 m	7,0 m
10	12 m	8 m

Parameter 3 : Setting the minimum heating temperature
This can be set to one of two values : 38°C or 50°C.

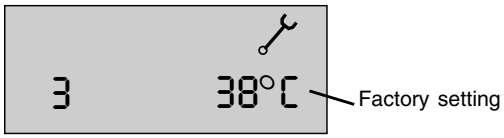

Parameter 4 : Setting the maximum heating temperature
This can be set to one of four values : 50°C, 73°C, 80°C and 87°C.

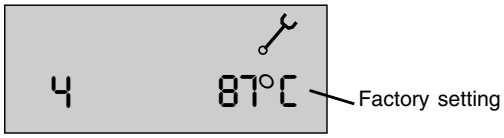

Parameter 5 : Pump operation
This can be set to one of three values :

1 - intermittent (with room thermostat)
2 - intermittent (with burner)
3 - permanently on

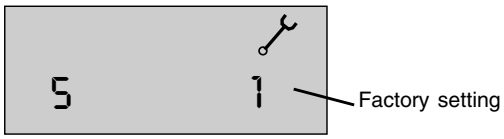

16 Changing Gas Type

Should it be necessary to change the gas type, a conversion kit with instructions will be required.

This modification must only be carried out by a suitably qualified engineer.

F30E Plus

Conversion natural Gas (G20) to G30/G31 Part No. A2011700.

F24E Plus

Conversion from natural gas (G20) to LPG (G30 or G31), Part No. A20027.

Adjusting the step pressure.

This setting is used to adjust step pressure which may be necessary after gas conversion or after changing the gas control valve.

Settings:- 2.9 mbar Natural gas G20

4.41 mbar Butane G30

5.4 mbar Propane G31

Lock the boiler at minimum power as follows.

Press the mode button for about 10 seconds, Use + or - to display code ‘96’, Press the mode button to confirm, The display idicates line 1 in the data menu, The figure on the left is the data, the one on the right is the setting for the data. Scroll through the data using + or - until you reach ‘8’, Press the mode button the figure on the right begins to flash, Change it to ‘1’ using + or -. Press the mode button to confirm. This mode will time out after 15 minutes.

Adjust the step pressure. The factory set value is noted on the data label.

Press the mode button for about 10 seconds, Use + or - to display code ‘35’, Press the mode button to confirm, The display idicates line 23 in the data menu, The figure on the left is the data, the one on the right is the setting for the data. Scroll through the data using + or - until you reach ‘24’, Press the mode button the figure on the right begins to flash, Change it to the required setting ‘0 to 199’ using + or -. Press the mode button to confirm.

Setting maximum burner pressure.

This setting is used only to reduce burner pressure at maximum setting, if the network pressure is constantly higher than normal pressure.

Settings:- 12.2 mbar Natural gas G20

23.2 mbar Butane G30

29.8 mbar Propane G31

Lock the boiler at maximum burner pressure as follows.

Press the mode button for about 10 seconds, Use + or - to display code ‘96’, Press the mode button to confirm, The display idicates line 1 in the data menu, The figure on the left is the data, the one on the right is the setting for the data. Scroll through the data using + or - until you reach ‘8’, Press the mode button the figure on the right begins to flash, Change it to ‘2’ using + or -. Press the mode button to confirm. This mode will time out after 15 minutes.

Adjust the maximum burner pressure setting.

Press the mode button for about 10 seconds, Use + or - to display code ‘35’, Press the mode button to confirm, The display idicates line 23 in the data menu, The figure on the left is the data, the one on the right is the setting for the data. Scroll through the data using + or - until you reach ‘25’, Press the mode button the figure on the right begins to flash, Change it to the required setting ‘0 to 199’ using + or -. Press the mode button to confirm.

REMEMBER, when replacing a part on this appliance, use only spare parts that you can be assured conform to the safety and performance specification that we require. Do not use reconditioned or copy parts that have not been clearly authorised by Hepworth Heating.

To ensure the continued efficient and safe operation of the boiler it is recommended that it is checked and serviced at regular intervals. The frequency of servicing will depend upon the particular installation conditions and usage, but in general once a year should be enough.

It is the law that any servicing is carried out by a competent person.

17.1 Products of combustion check

Top Flue: To obtain a products of combustion reading, unscrew the left hand sampling point cap on the flue elbow, located on top of boiler, **see diagram 17.1.**

Rear Flue: To obtain a products of combustion reading, remove the sampling point cap on the flue spigot, located between the boiler and the wall, **see diagram 17.1.**

Connect the analyser tube onto sampling point.

Refer to the combustion product values in **Section 1 Technical Data.**

Switch on the electrical supply and gas supply, then operate the boiler.

On completion of the test switch off the electrical supply and the gas supply, remove analyser tube and replace sampling point cap.

17.2 Service Check and Preparation.

• Isolate boiler from the gas and electrical supplies.

• Drain the Domestic hot water cuircuit and the boiler, **refer to diagram 17.2.**

• On completion check all gas-carrying parts for soundness with leak detection fluid.

• Remove boiler casing as follows:

17.3 Front panel

• Unscrew and remove the two retaining screws from the bottom of the front panel.

• Remove front panel by lifting up and forward.

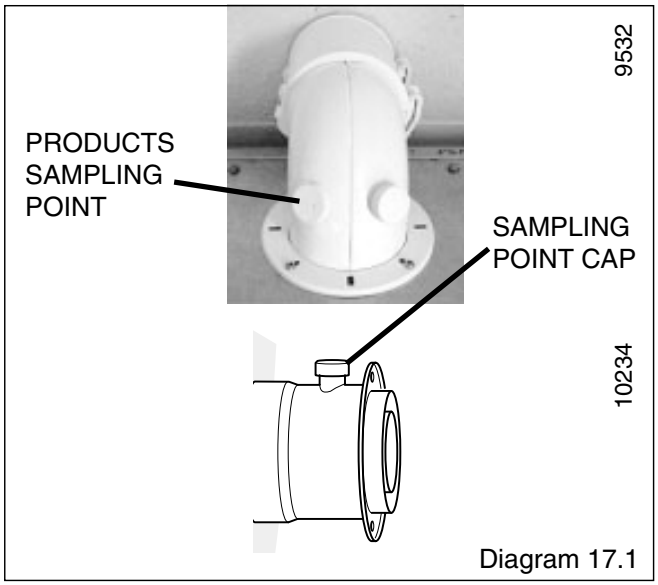

Diagram 17.1

17.4 Control panel

• Lower forwards to gain access to lower part of boiler.

17.5 Sealed chamber cover

• Unscrew and remove the two retaining screws from the sealed chamber cover**, see diagram. 17.3**.

• Lift cover up and off pins on top of boiler.

17.6 Side panels (for ease of access if available), refer to diagram 17.4

• Unscrew and remove the two retaining screws from front of each side panel.

• Left hand side panel only disconnect the control panel retaining strap at the control panel.

• Unhook each panel from the front retaining tabs.

• Pull each panel forward from the rear retaining tabs to remove.

To Drain the Domestic hot water circuit

- Close boiler isolating valve **(b)**.
- Turn on one or more hot water taps.

To Drain the boiler

- Close isolating isolating valves **(a) and (c).**
- Open the boiler drain valve **(f).**

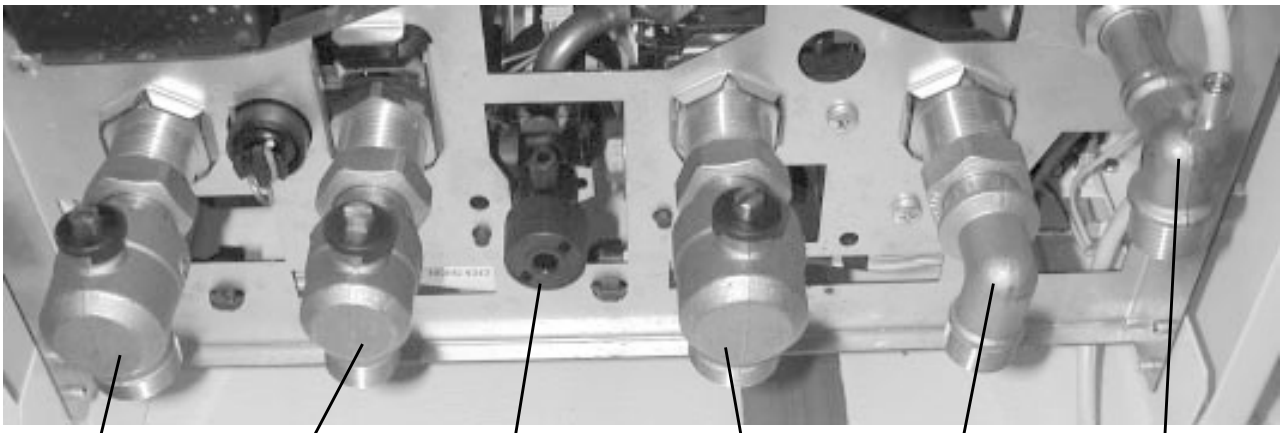

(a) HEATING RETURN

(b) COLD WATER INLET

(f) BOILER DRAIN VALVE

(c) HEATING FLOW

(d) DOMESTIC HOT WATER OUTLET

(e) GAS SERVICE COCK

Note: Isolating cocks water and gas are shown in the: OFF position

Diagram 17.1

Diagram 17.3

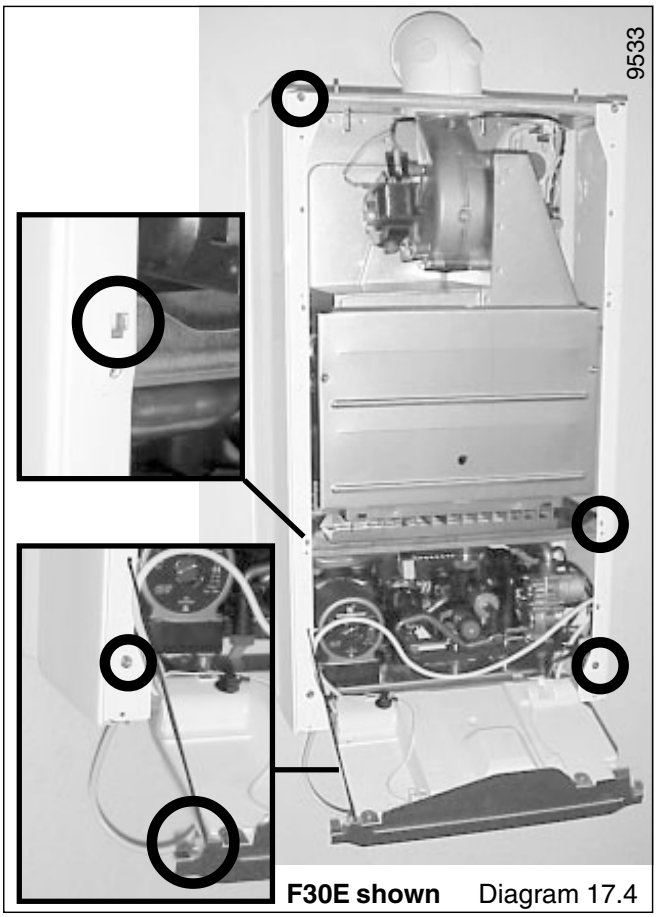

F30E shown Diagram 17.4

17.7 Combustion chamber cover

• Unscrew and remove the two screws securing combustion chamber cover to combustion chamber, **see diagram 17.5**.

• Remove combustion chamber cover from boiler.

17.8 Spark and Sense Gaps

• Check that the spark and sense gaps as shown in **diagram 17.6.** Note: To gain access to spark and sense electrodes for removal, refer to **Section, 20.12 and 20.13 in Replacement of Parts**.

17.9 Burner, refer to diagram 17.7

• Unscrew and remove the two burner retaining screws.

• Remove burner from boiler by easing it forward off the two burner guides, taking care not to damage the insulation.

• Clean burner by washing in soapy water. Dry thoroughly before refitting.

Note: To gain access to injectors for removal and cleaning, refer to **Section, 20.9.**

17.10 Fan, refer to diagram 17.8

• Disconnect power supply leads and earth lead from fan.

• Disconnect the electrical plug from the fan sensor.

• Unscrew and remove the two fan retaining bolts.

• Ease the fan down and forwards to remove.

17.11 Heat exchanger, refer to diagram 17.9

• Remove air pressure switch sensing tube from the side of the flue hood.

• Unscrew and remove the two retaining screws from front of each side panel.

• Unhook each panel from the front retaining tabs and ease outwards.

• Remove the flue hood. When refitting ensure the rear of the flue hood locates in the tabs.

• Use a soft brush or vacuum clean the heat exchanger.

DO NOT USE ANY TOOL LIKELY TO DAMAGE PAINTED FINISH OF HEAT EXCHANGER.

17.12 Domestic water inlet filter, refer to diagram 17.10

If the water flow rate through the appliance has reduced it may be necessary to clean or replace the domestic water inlet filter.

• Close isolating valve **(b)** on cold water inlet.

• Pull out slotted clip securing the filter in its housing, remove the filter to clean or renew if necessary.

Push the filter fully into its housing and replace the securing clip.

• Open isolating valve **(b)** on cold water inlet and test the Domestic Hot Water circuit for soundness.

17.13 Central Heating Filter, refer to diagram 17.11

Remove the filter retaining clip and filter clean or renew if necessary**.**

Push the filter fully into its housing, ensuring the correct orientation. The flat and hole in the filter as shown. Secure with retaining clip.

17.14 Sealed Chamber Cover - Seal Check

Check the condition of the seal, replace as required.

To replace remove the old seal, thoroughly clean the casing sufaces. Fit the new seal, it is supplied to the correct length, **see diagram 20.29.**

17.15 Combustion Chamber Insulation

Check the condition of the combustion chamber insulation.
If renewing, **refer to Section 20.15.**

17.16 Flue system

• Check externally to make sure that flue is not blocked

• Inspect flue system to make sure that all fittings are secure.

17.17 Reassembly of parts removed for servicing

All parts are replaced in reverse order to removal.

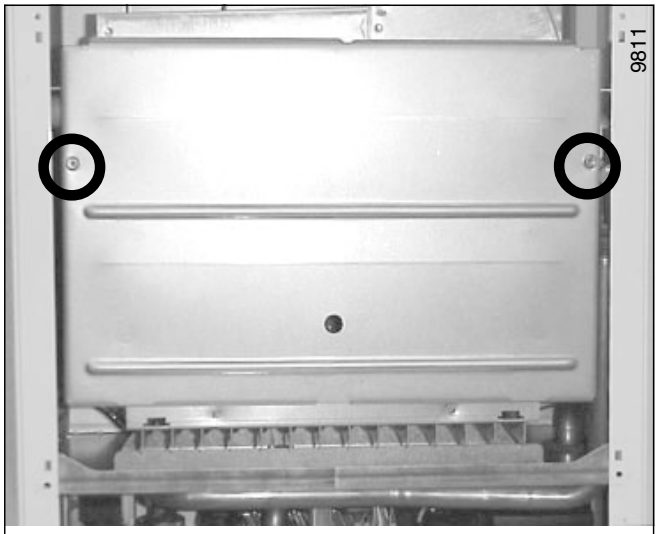

Diagram 17.5

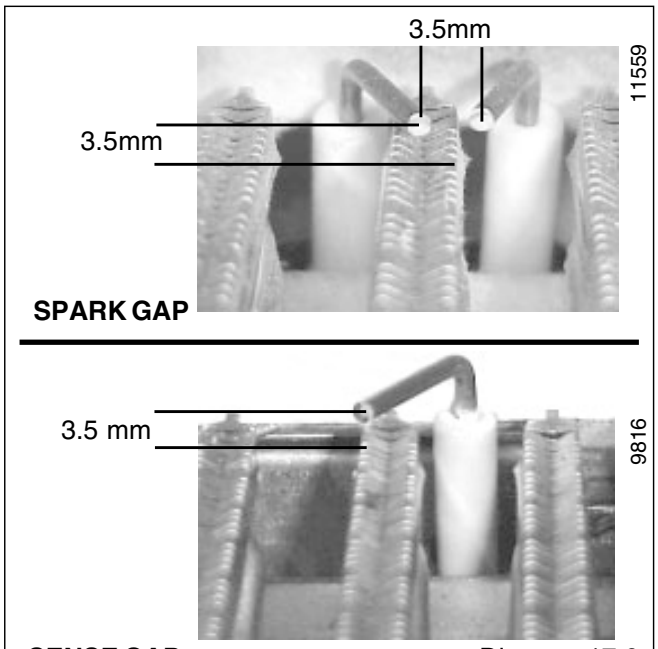

Diagram 17.6

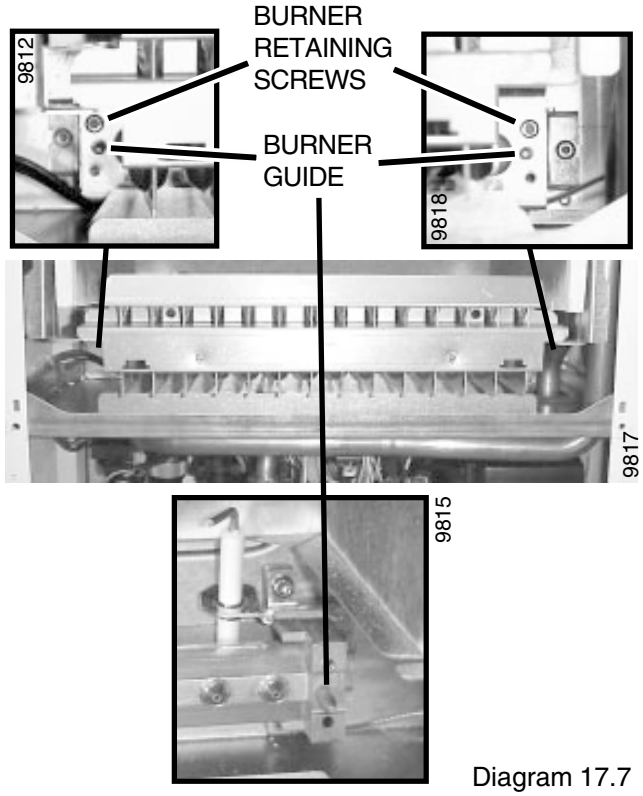

Diagram 17.7

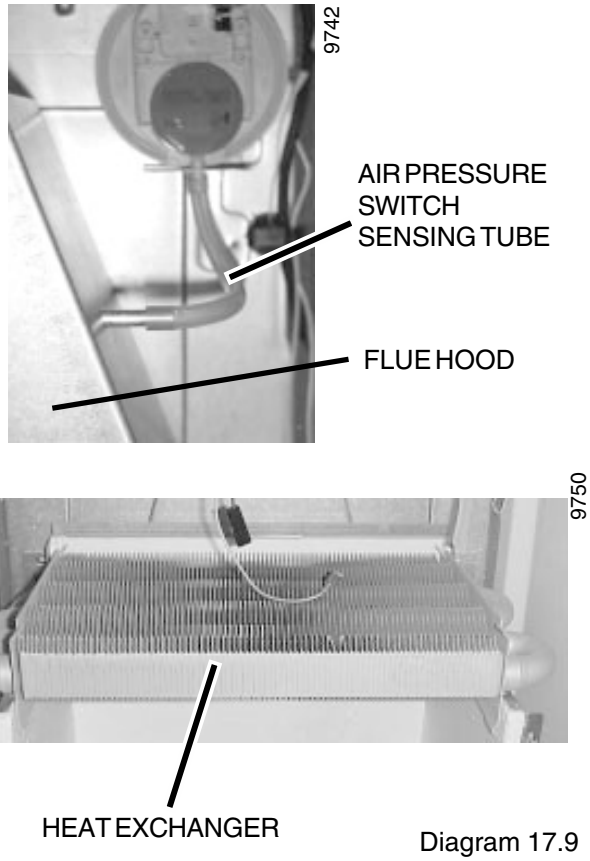

Diagram 17.9

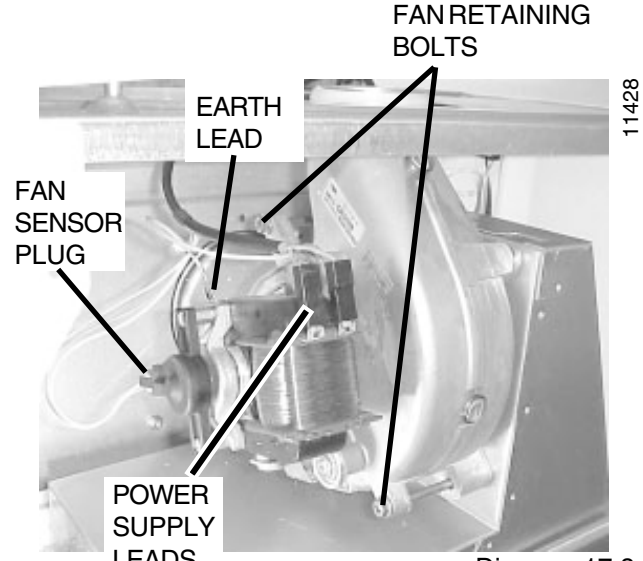

Diagram 17.8

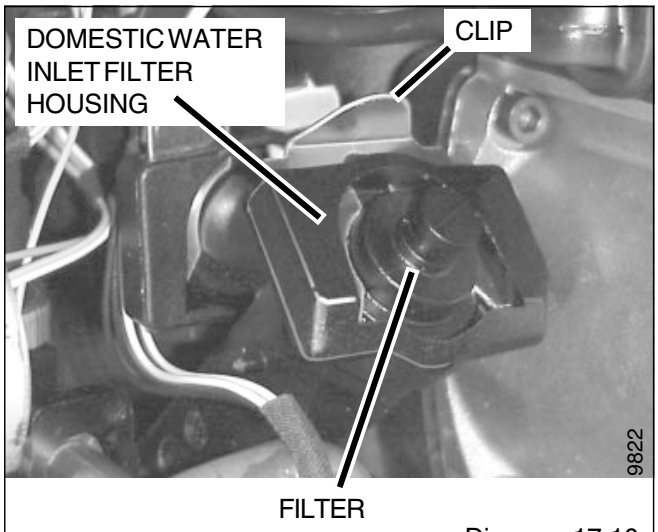

Diagram 17.10

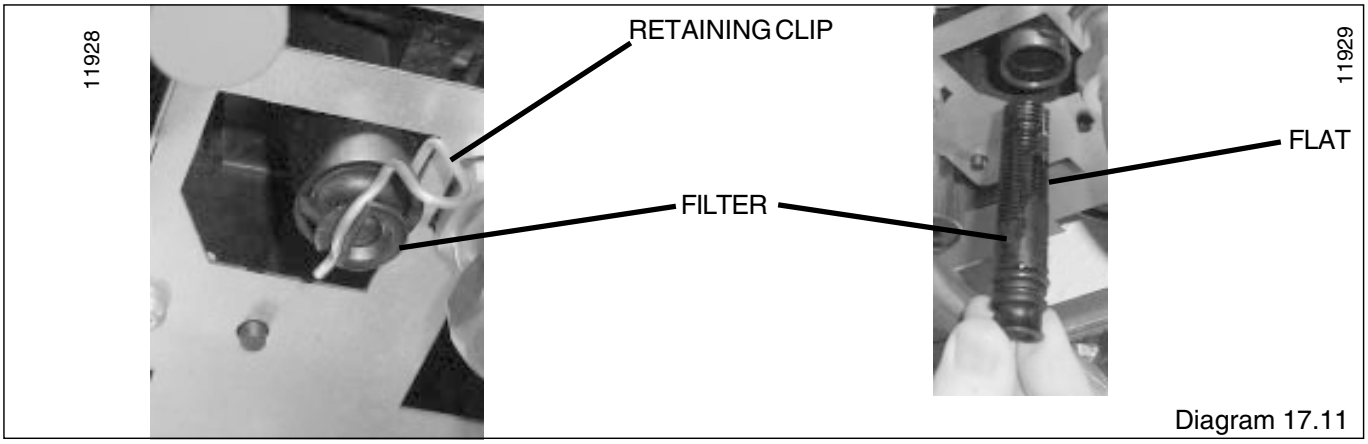

Diagram 17.11

18 Fault Finding

Before trying to operate the boiler make sure that :

- All gas supply cocks are open and that the gas supply has been purged of air.
- The heating system pressure is at least 1 bar.
- There is a permanent mains supply to the boiler and that the polarity is correct.
- The fuse on the PCB is intact.

WARNING. Always isolate the boiler from the electrical supply before carrying out any electrical replacement work.

Always check for gas soundness after any service work.

Should there be any doubt about the voltage supply to any of the components, it is possible to carry out a simple electrical test to ensure all is operational in that area.

IMPORTANT: On completion of the fault finding task which has required the breaking or remaking of the electrical connections, the continuity, polarity, short circuit and resistance to earth checks must be repeated using a suitable multimeter.

Overheat thermostat reset button

Refer to **Section 20.10** to locate the overheat thermostat reset button.

Depress the button to reset.

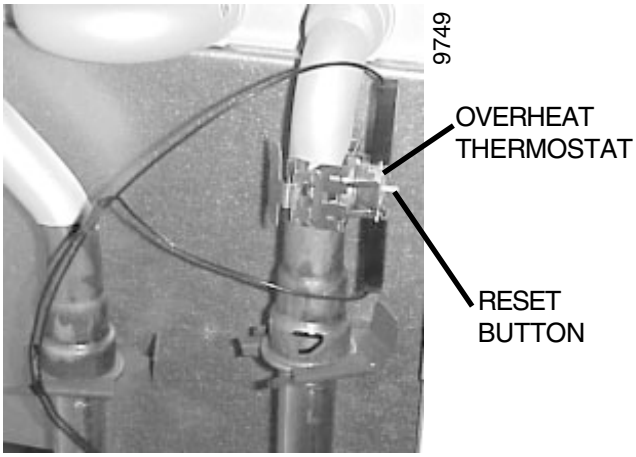

Diagram 18.1

DISPLAY	FAULT
'01'	Ignition fault (lockout) caused by no gas, no detection
'02'	Air fault, pressure switch, no power to fan
'03'	Air fault lock
'04'	Ignition fault (lockout) caused by no gas, no detection
'05'	Overheat fault
'06'	Central heating flow NTC fault
'07'	Domestic hot water NTC fault
'08'	Micro accumulation vessel NTC fault
'09'	Water pressure sensor fault
'10'	Central heating return NTC fault
'11'	No reception by the main board (MMI Lead)
'12'	User interface or distant control panel fault
'13'	Main board fault
'14'	Over temperature on primary water circuit
'15'	Stepper motor fault (gas valve)
'16'	Gas safety valve failure
'17'	Power supply <170V
'18'	Local user interface fault
'19'	Central heating NTC not connected to pipe
'20'	User interface not compatible with boiler
'0.5bar' '2.7bar'	Lack of water fault (<0.5b) Upper water pressure (>2.7b)

11669

18 Fault Finding

TYPE OF FAULT	CHECK
No display on control panel	• 230V supply • PCB fuse • Connection between PCBs
No domestic hot water No central heating (warning light of fault code displayed on control panel)	• Loose connections on control board (PCB) • Connections on air pressure switch (electrical or tubes) disconnected • Faulty control or interface board (PCB's) • Water pressure, flashing pressure • Shortage of air or gas • Faulty temperature sensor • Overheating

COMPONENT TESTING DATA

COMPONENT	NORMAL MEASURE	CHECK
Gas control valve Resistance of coil 116Ω	*Under demand during ignition sparks:* 24V dc for 1 to 2 seconds, then 12Vdc (constant) at the gas control valve electrical connection.	*If 0 Volt:* the gas control valve is not faulty. *If 24 Volts and then 12 Volts but no gas at the burner:* Check if the gas control valve is stuck. If not, check the adjustment valve.
Adjustment valve (step motor)	*Close the gas inlet:* Dismantle the step motor (screw not sealed in). Trigger a demand and check that the valve opens during the ignition.	*If the valve does not move:* Check the connections at both motor and control board (PCB). Change the motor. Replace the control board (PCB).
Three way valve. Electrical supply to motor 0Ω between 1 and 3. 9.6kΩ between 1 and 2. 9.6kΩ between 1 and 3. (1, 2 and 3 marked on the motor). Thrust action of the motor. (remove gas control valve before testing)	*When heating is on:* 230V ac between 1 and 2 of the motor. About 25V ac to 35V ac between 2 and 3. *When hot water is on:* 230V ac between 2 and 3 of the motor. About 25V ac to 35V ac between 1 and 2. Unfasten the clip (YES, no risk of water leak), pull out the motor and leave it plugged in. *When hot water is on:* the spindle should pull in. *When heating is on :* the spindle should push out.	*If voltages are different:* Connections. Control board (PCB). Three way valve lead. 3 2 1 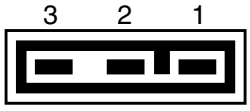 If electrical supply is OK. but the spindle does not move Replace the motor, or replace the control board (PCB).
Domestic water flow		*To test:* Use a new detector and connect it electrically in place of the faulty one . Blow through to simulate a demand for water.

FAULT: NO HEATING

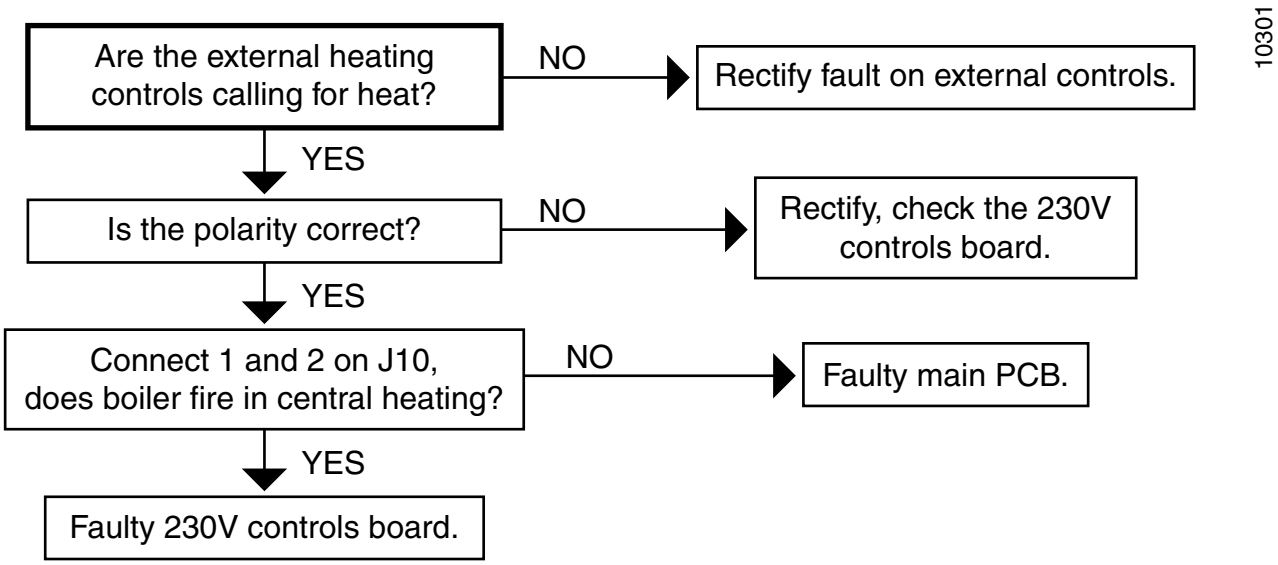

FAULT: NO HOT WATER, BUT THE HEATING IS WORKING

9961

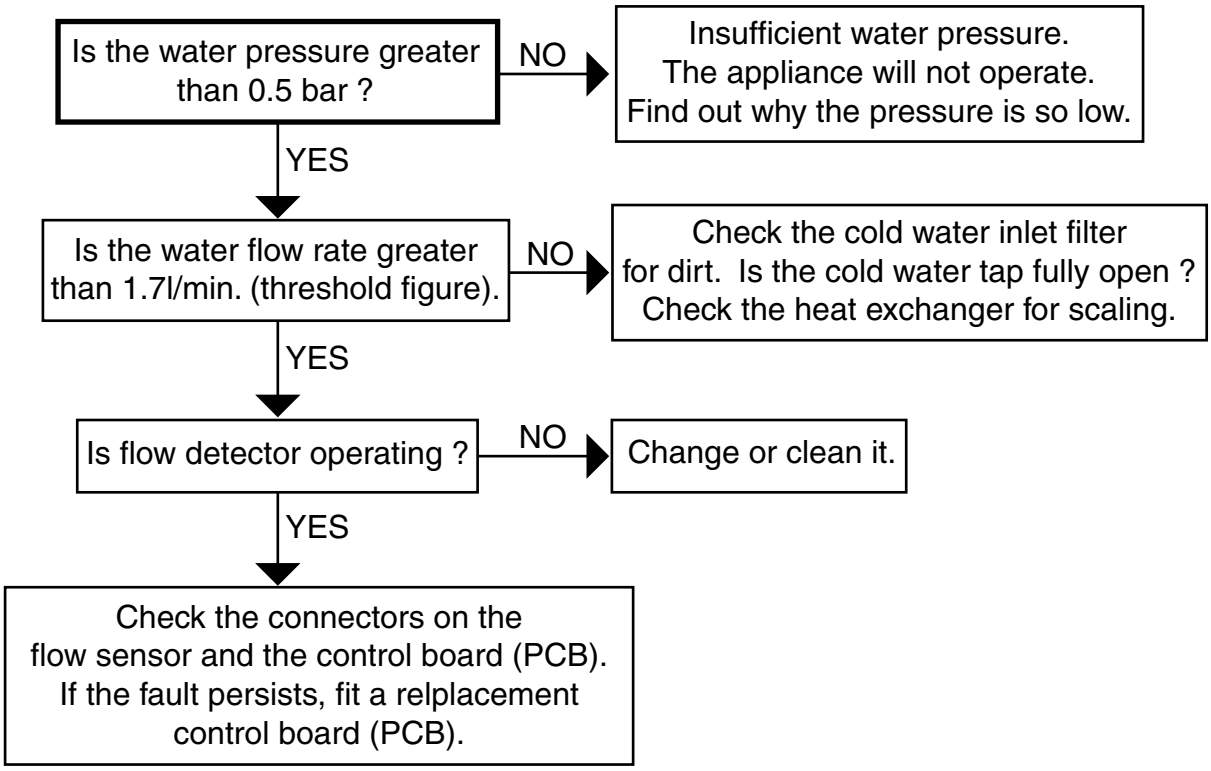

FAULT: THE BURNER LIGHTS BUT THEN GOES OUT. THERE IS NO FLAME DETECTED.

11797

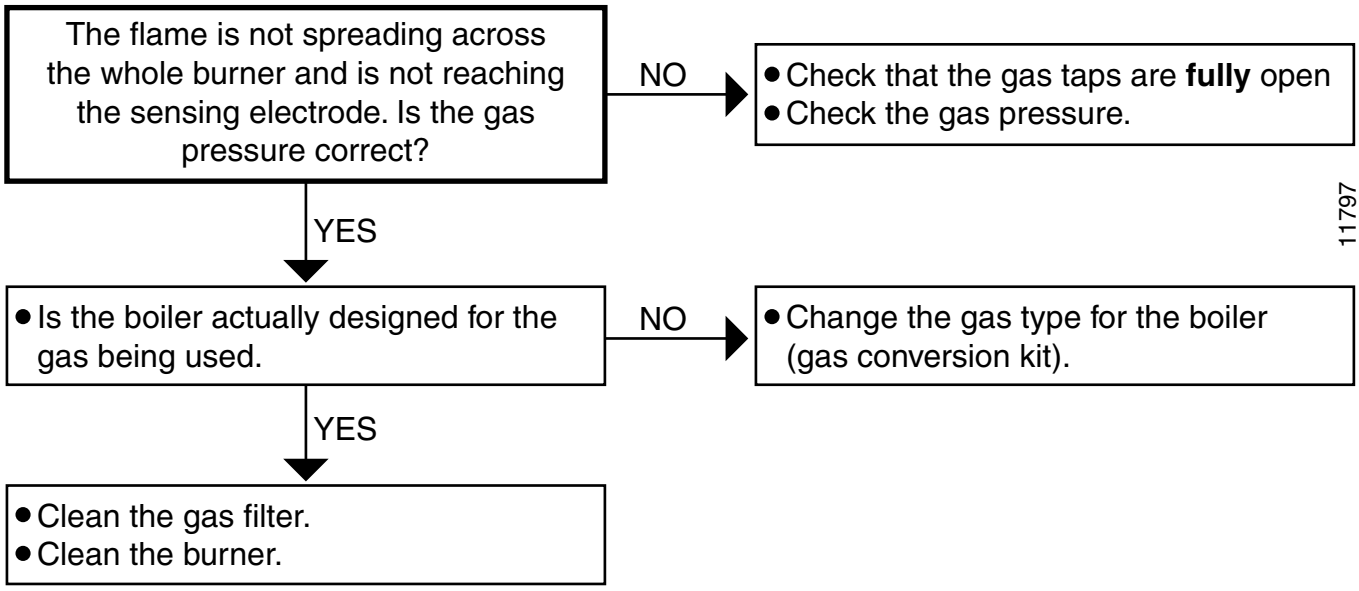

FAULT: THE BURNER LIGHTS, THEN GOES OUT.

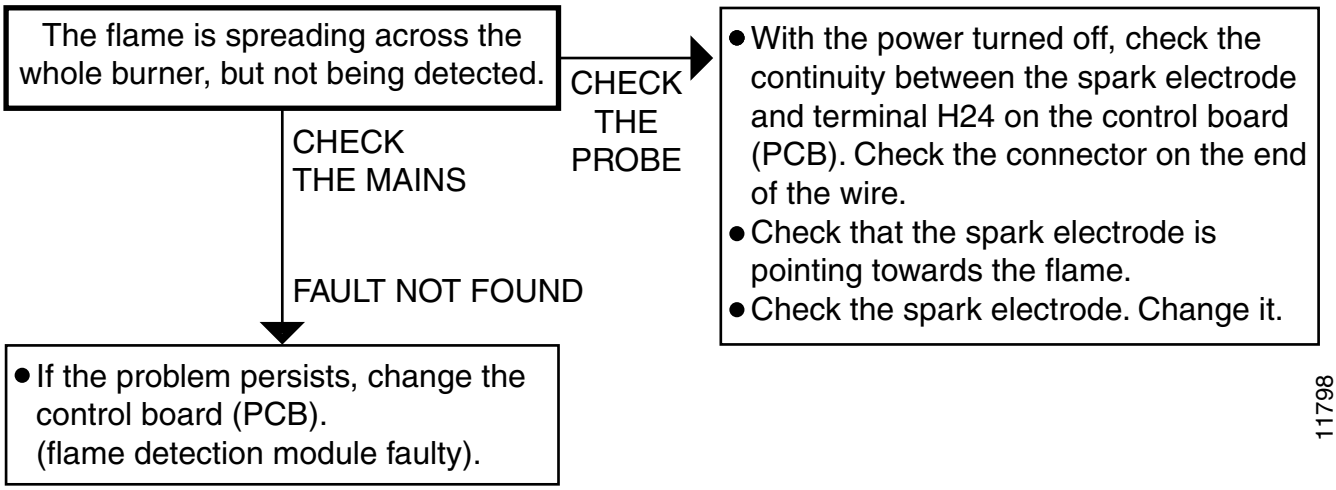

FAULT: THE BURNER DOES NOT LIGHT AT ALL, BUT THERE IS AN IGNITION SPARK.

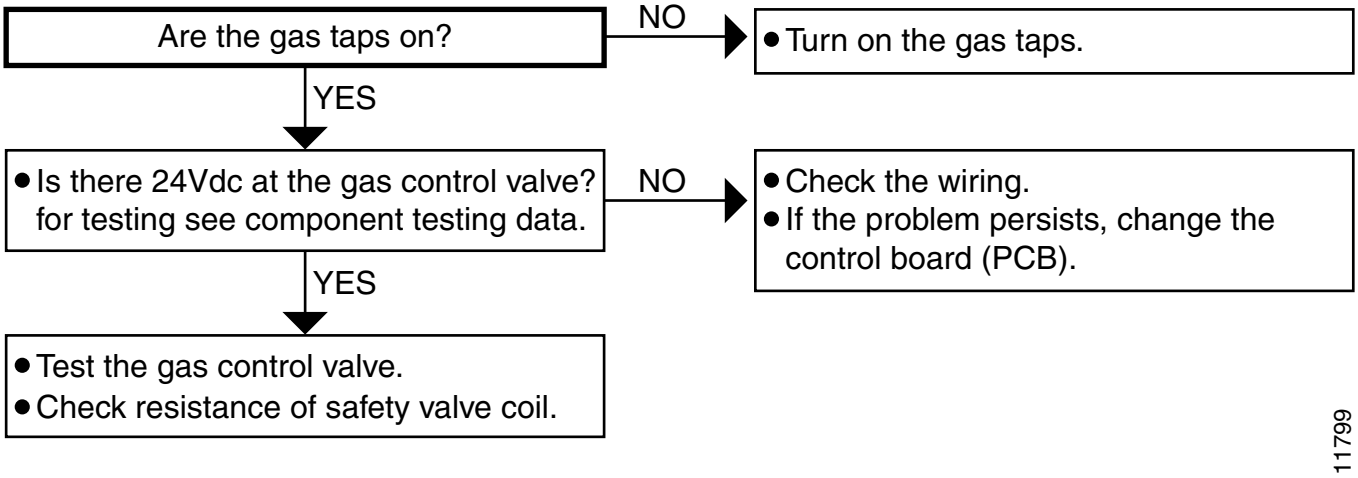

FAULT: THE ROOM TEMPERATURE IS INADEQUATE AND RADIATORS ARE LUKE-WARM.

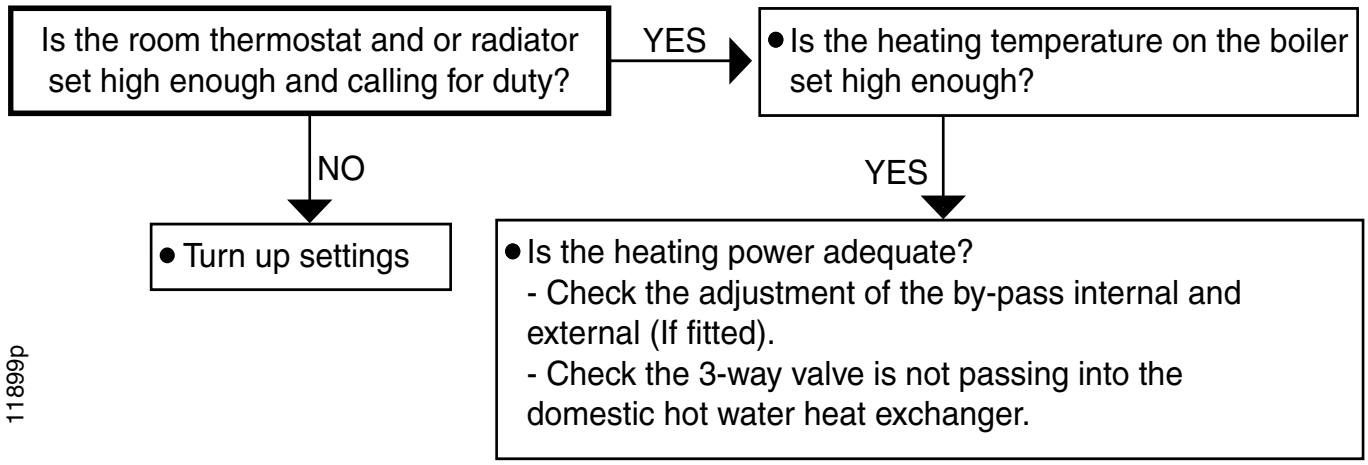

FAULT: THE WATER AT THE TAPS IS LUKE-WARM.

9966p

Is the temperature higher if you reduce the flow through the taps?

NO →
- Check the 3-way valve is not passing into the radiators. (The radiators should stay cold in Summer setting)

YES ↓
- Check that the flow restrictor on the cold water inlet is fitted.
- Check the rate of flow.
- Check burner pressure is correct.

FAULT: THE FAN DOES NOT START.

9968p

Is there is 230V ac at fan during demand?

NO → Check continuity of fan harness.

YES ↓ Faulty fan, replace.

YES ↓ Faulty PCB, replace.

FAULT: THE FAN RUNS BUT THERE ARE NO SPARKS.

- **CHECK CONTINUITY OF IGNITION (ELECTRODES AND LEADS)**
- **CHECK POWER SUPPLY FROM PCB TO IGNITION UNIT**

CONNECTIONS TO THE AIR PRESSURE SWITCH

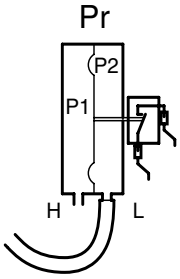

Air flow switch take-off.

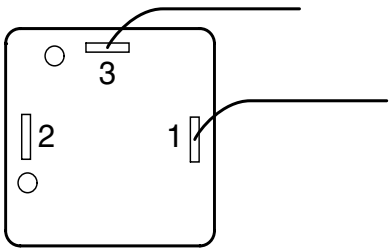

Electrical contacts.

11877

19 Wiring Diagram

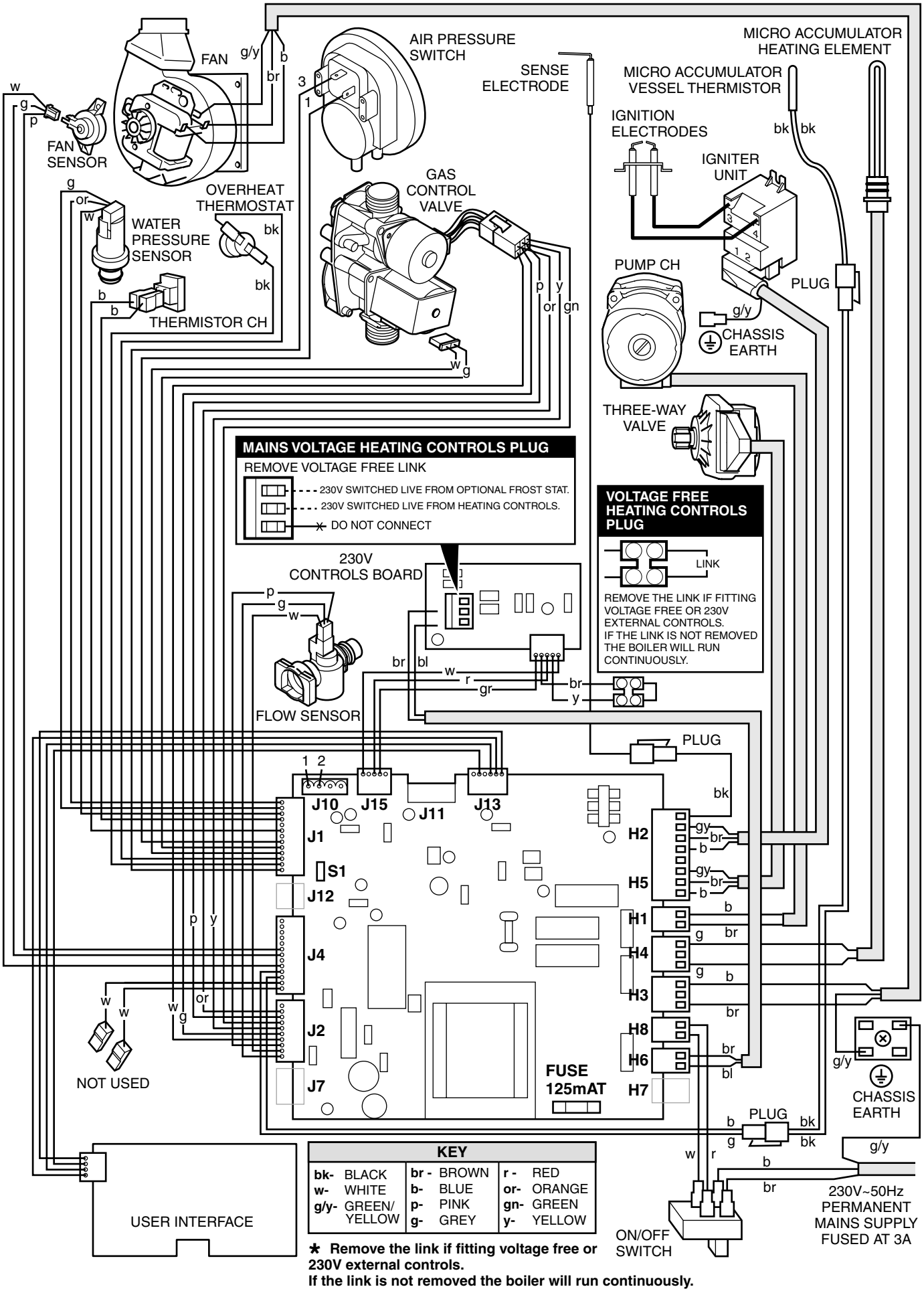

KEY		
bk- BLACK	br - BROWN	r - RED
w- WHITE	b- BLUE	or- ORANGE
g/y- GREEN/ YELLOW	p- PINK	gn- GREEN
	g- GREY	y- YELLOW

✱ Remove the link if fitting voltage free or 230V external controls.
If the link is not removed the boiler will run continuously.

To Drain the central heating circuit

- Open drain valve fitted at the lowest point in the system.
- Allow air into the system by opening a radiator bleed screw or the boilers drain valve **(f)**.

To Drain the Domestic hot water circuit

- Close boiler isolating valve **(b)**.
- Turn on one or more hot water taps.

To Drain the boiler

- Close isolating valves **(a), (b) and (c).**
- Open the boiler drain valve **(f).**
- Turn on one or more hot water taps.

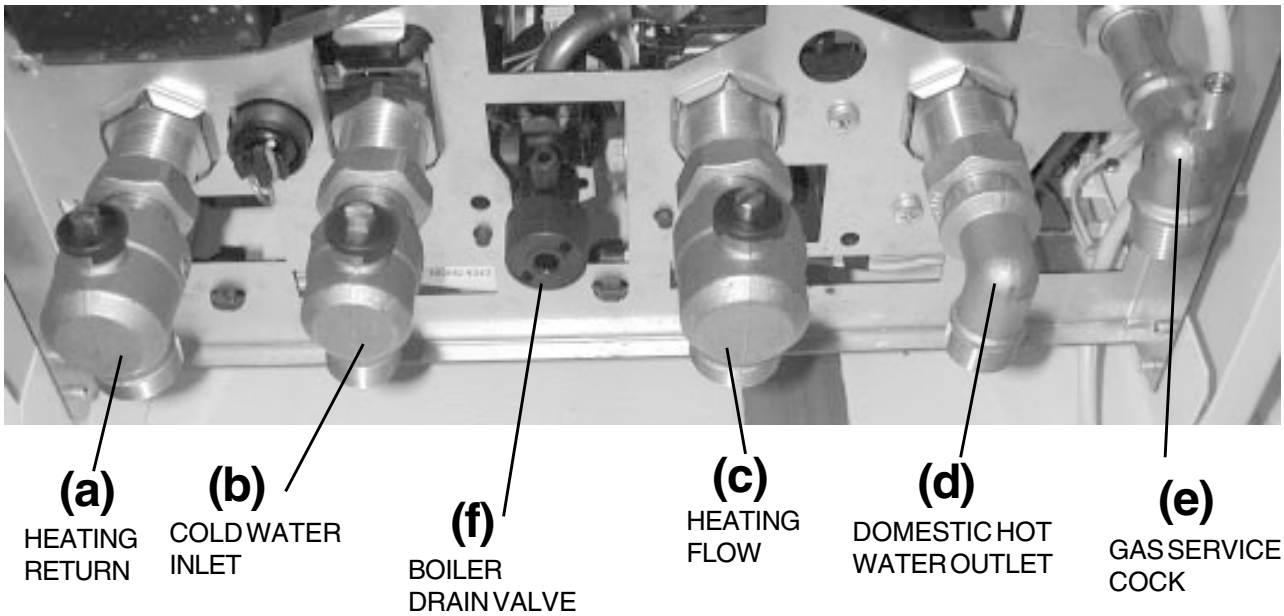

Note: Isolating cocks water and gas are shown in the: OFF position

Diagram 20.1

IMPORTANT INFORMATION

WARNING: Before commencing the replacement of any component, isolate appliance from electrical supply and turn off gas at service cock.

Replacement of parts must be carried out by a competent person.

When replacing components it may be necessary to renew sealing washers, gaskets and 'O' rings. If new ones are supplied with replacement components they must be used.

All parts are replaced in reverse order to removal.

If any gas-carrying components are disturbed, removed or replaced it will be necessary on completion to check for gas soundness with leak detection fluid.

20.1 Central heating thermistor

Before starting refer to the front of **Section 20 Important information.**

- Remove the front panel**, refer to Section 17.3.**
- Lower the control panel**, refer to Section 17.4.**
- Locate central heating thermistor on heating flow pipe on centre of boiler, **see diagram 20.2**.

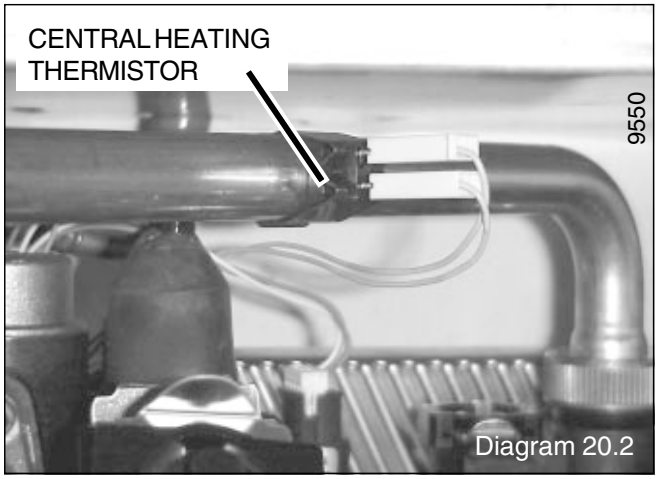

Diagram 20.2

- Unclip thermistor from pipe.
- Disconnect electrical connections from thermistor.
- Fit electrical connections to replacement thermistor and fit thermistor to pipe. The polarity is not important.

20.2 Fan, refer to Section 17.10

Before starting refer to the front of **Section 20 Important information.**

• Remove the front panel**, refer to Section 17.3.**

• Remove the sealed chamber cover**, refer to Section 17.5.**

• Remove the fan, **refer to Section 17.10.**

20.3 Fan sensor, refer to diagram 17.8

Before starting refer to the front of **Section 20 Important information.**

• Remove the front panel, refer to **Section 17.3.**

• Lower the control panel**, refer to Section 17.4.**

• Remove the sealed chamber cover**, refer to Section 17.5.**

• Disconnect the electrical plug.

• Remove the 2 fan sensor retaining screws.

• Remove the fan sensor.

20.4 Air pressure switch

Before starting refer to the front of **Section 20 Important information.**

• Remove the front panel**, refer to Section 17.3.**

• Remove the sealed chamber cover**, refer to Section 17.5.**

• Locate air pressure switch situated at the top right hand side, **see diagram 20.3**.

• Remove air pressure switch tube from sensing probe on flue hood.

Note: Do not fit tube until the air pressure switch is in position.

• Disconnect air pressure switch electrical connections.

• Unclip to remove air pressure switch.

20.5 Domestic water inlet filter

If the water flow rate through the appliance has reduced it may be necessary to clean or replace the water inlet filter.

Before starting refer to the front of **Section 20 Important information.**

• Remove the front panel**, refer to Section 17.3.**

• Lower the control panel**, refer to Section 17.4.**

• Clean or replace the water inlet filter, **refer to section 17.12**.

20.6 Central Heating Filter

It may be necessary to clean or replace the central heating filter.

Before starting refer to the front of **Section 20 Important information.**

• Isolate flow and return valves **(a)** and **(c)**

• Clean or replace the central heating filter, **refer to section 17.13**.

20.7 Cold water inlet restrictor

Before starting refer to the front of **Section 20 Important information.**

• Remove the front panel**, refer to Section 17.3.**

• Lower the control panel**, refer to Section 17.4.**

• Isolate cold water inlet valve **(b).**

Drain down domestic hot water circuit of boiler only, **refer to relevant part of diagram 20.1**.

• Remove the retaining wire.

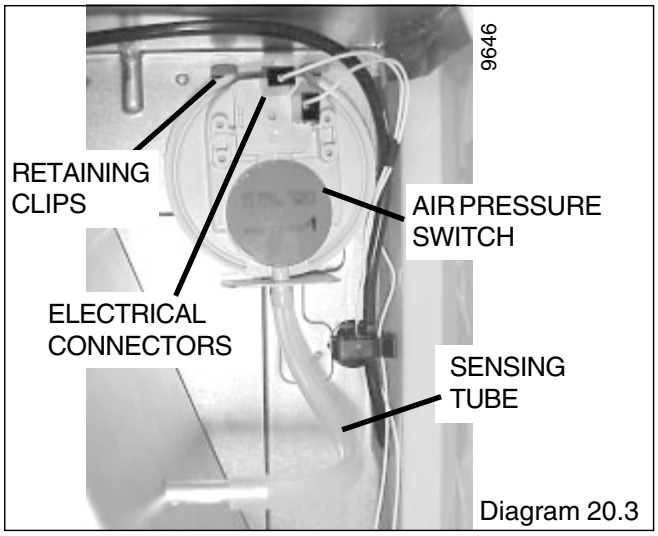

Diagram 20.3

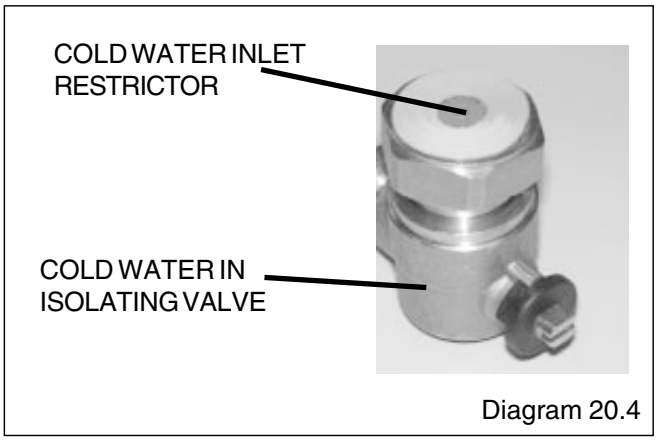

Diagram 20.4

• Undo union nuts from boiler cold water in isolating valve.

• Clean and inspect restrictor, replace if necessary, **see diagram 20.4.**

20.8 Burner, refer to Section 17.9.

Before starting refer to the front of **Section 20 Important information.**

• Remove the front panel**, refer to Section 17.3.**

• Lower the control panel**, refer to Section 17.4.**

• Remove the sealed chamber cover, **refer to Section 17.5.**

• Remove the combustion chamber cover, **refer to Section17.7.**

• Remove the burner, **refer to Section 17.9.**

20.9 Burner injectors, refer to diagram 20.5.

Before starting refer to the front of **Section 18 Important information.**

• Remove the front panel**, refer to Section 17.3.**

• Lower the control panel**, refer to Section 17.4.**

• Remove the sealed chamber cover, **refer to Section 17.5.**

• Remove the combustion chamber cover, **refer to Section17.7.**

• Remove burner from boiler, **refer to Section 17.9.**

• Remove and replace injectors as required.

Note: The injectors may be cleaned, remove injectors inspect and clean. ***Do not use a wire or sharp instrument.***

Note: Make sure that injector size, marked on each injector, is the same as that given in '**Section 1 Technical Data**' for the type of gas being used.

20.10 Burner injector assembly, refer to diagram 20.5 and 20.6.

Before starting refer to the front of **Section 20 Important information.**

• Remove the front panel**, refer to Section 17.3.**

• Lower the control panel**, refer to Section 17.4.**

• Remove the sealed chamber cover, **refer to Section 17.5.**

• Remove the combustion chamber cover, **refer to Section 17.7.**

• Remove burner from boiler, **refer to Section 17.9.**

• Undo the gas supply union nut from under the sealed chamber.

Note: The fibre washer between the burner injector assembly and gas supply must be kept for use on reassembly.

• Undo and remove the sense and ignition electrode assemblies.

• Remove the burner injector assembly securing screws.

• Remove the burner injector assembly by lifting up, easing the gas connection through the grommet in the sealing chamber.

Note: Take care not to damage the insulation.

• When refitting burner injector assembly ensure the gas connection locates correctly through the grommet.

Note: Make sure that injector size, marked on each injector, is the same as that given in '**Section 1 Technical Data**' for the type of gas being used.

20.11 Overheat thermostat

Before starting refer to the front of **Section 20 Important information.**

• Remove the front panel**, refer to Section 17.3.**

• Remove the sealed chamber cover**, refer to Section 17.5.**

• Locate overheat thermostat on heating flow pipe on left hand side of boiler, **see part of diagram 20.7.**

• Disconnect electrical connections from thermostat

• Remove the thermostat and bracket assembly from heating flow pipe by unclipping at the side of the bracket. Remove the thermostat, fit new thermostat and replace assembly.

• When refitting electrical connections to replacement thermostat the polarity is not important.

20.12 Ignition electrode

Before starting refer to the front of **Section 20 Important information.**

• Remove the front panel, **refer to Section 17.3.**

• Lower the control panel, **refer to Section 17.4.**

• Remove the sealed chamber cover, **refer to Section 17.5.**

• Remove the combustion chamber cover, **refer to Section 17.7.**

• Remove the burner, **refer to Section 17.9.**

• Remove the right hand side panel, **refer to Section 17.6.**

• Undo and remove screw securing electrode assembly to the burner injector assembly, **see diagram 20.6.**

• Disconnect the electrical connections at the ignition unit, **see diagram 20.22.** Note the routing of the cables.

20.13 Flame sense electrode

Before starting refer to the front of **Section 20 Important information.**

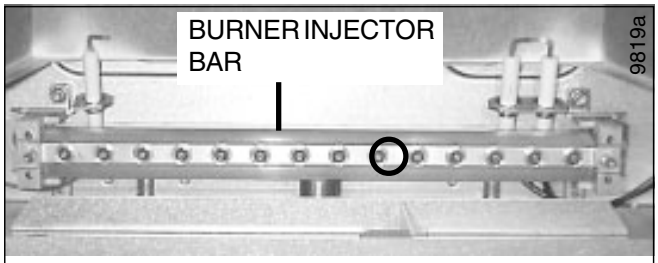

Diagram 20.5

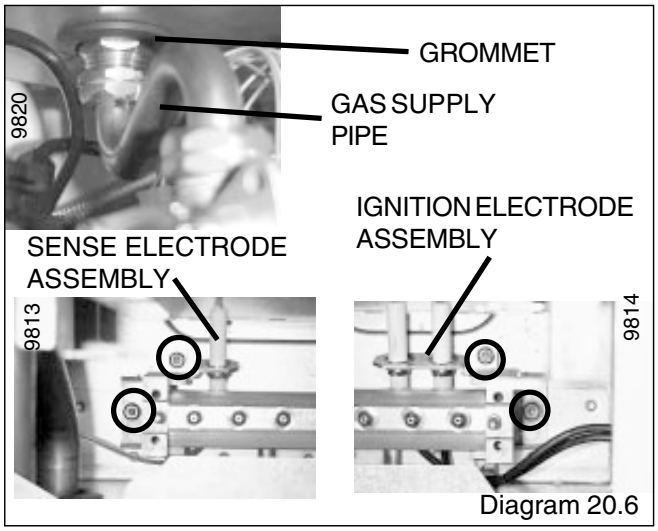

Diagram 20.6

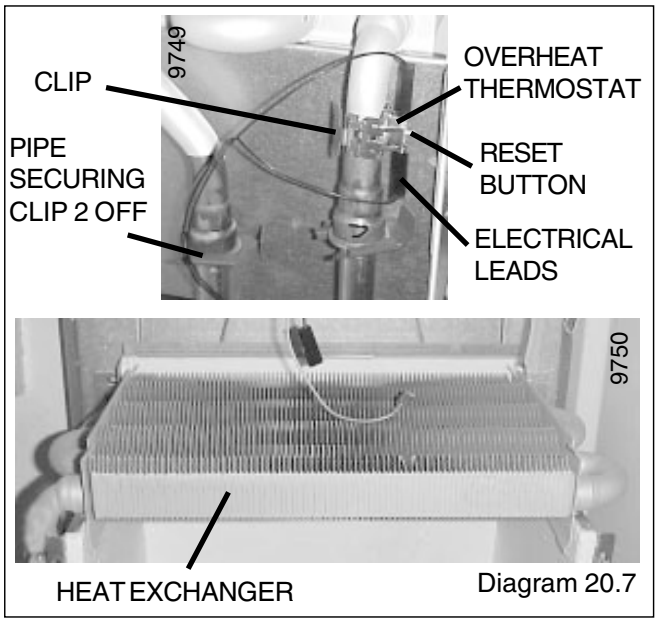

Diagram 20.7

• Remove the front panel, **refer to Section 17.3.**

• Lower the control panel, **refer to Section 17.4.**

• Remove the sealed chamber cover, **refer to Section 17.5.**

• Remove the combustion chamber cover, **refer to Section 17.7.**

• Remove burner, **refer to Section 17.9**.

• Remove the left hand side panel**, refer to Section 17.6.**

• Undo and remove screw securing sense assembly to the burner injector assembly**, see diagram 20.6.**

• Disconnect the electrical connection from the inline connector**,** Note the routing of the cable.

20.14 Heat exchanger, refer to diagram 20.7.

Before starting refer to the front of **Section 20 Important information.**

• Remove the front panel**, refer to Section 17.3.**

• Remove the sealed chamber cover**, refer to Section 17.5.**

• Remove the combustion chamber cover**, refer to Section 17.7.**

• Drain down central heating water circuit of the boiler only, **refer to relevant part of diagram 20.1**.

• Remove the fan, **refer to Section 17.10.**

• Remove air pressure switch sensing tube from the side of the flue hood**, see diagram 17.9.**

• Release both side panels, **refer to section 17.6.**

• Remove the flue hood, lift up and off. When refitting ensure the rear of the flue hood locates in the tabs.

• Disconnect the electrical leads from the overheat thermostat.

• Remove the two pipe securing clips.

• Lift to remove the heat exchanger taking, care not to damage the insulation.

20.15 Combustion chamber insulation, refer to diagram 20.8.

Before starting refer to the front of **Section 20 Important information.**

• Remove the front panel**, refer to Section 17.3.**

• Remove the sealed chamber cover**, refer to Section 17.5.**

• Remove the combustion chamber cover**, refer to Section 17.7.**

• Remove the heat exchanger, **refer to Section 20.14.**

• Pull out side insulation panels from combustion chamber.

• Tilt rear insulation panel forwards and out.

• Fit replacement insulation in reverse order to removal.

20.16 Printed circuit board (PCB), refer to diagram 20.9.

Before starting refer to the front of **Section 20 Important information.**

• Remove the front panel**, refer to Section 17.3.**

• Lower the control panel**, refer to Section 17.4.**

• Gain access to rear of control panel.

• Undo and remove the two front retaining screws.

• Hinge up the control panel cover and ease forwards from the rear retaining lugs to gain access to PCB. Do not strain the cables attached to the PCB. Note the routing of the cables.

• Carefully pull off electrical connections to PCB.

• Unclip and lift out PCB.

• Fit replacement PCB in reverse order to removal. Be careful not trap any of the cables.

Make sure that PCB connections are fully pushed onto replacement PCB.

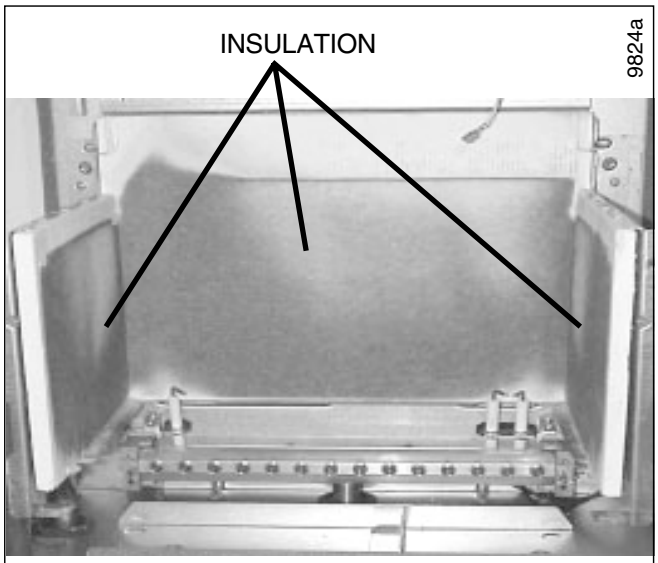

Diagram 20.8

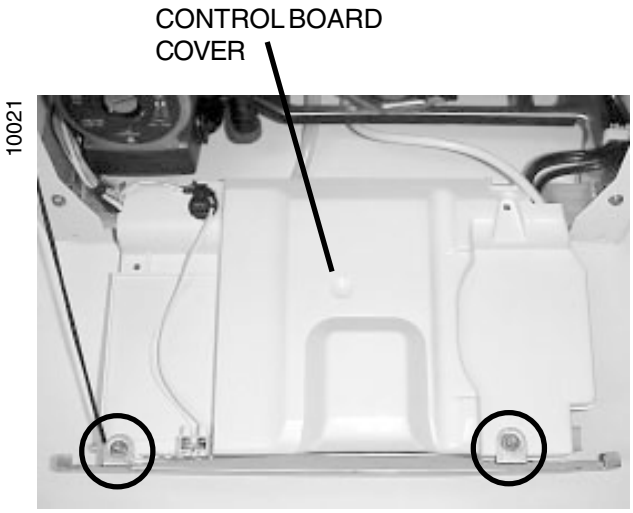

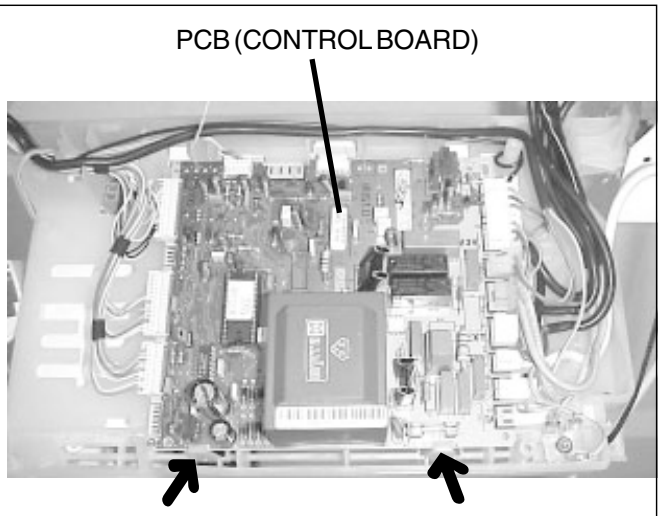

Diagram 20.9

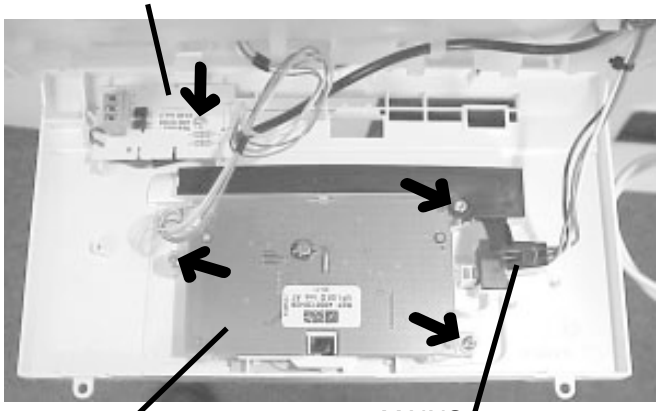

Diagram 20.10

20.17 User interface board, refer to diagram 20.10.

Before starting refer to the front of **Section 20 Important information.**

• Unclip control panel user interface and hinge forward . Do not strain the cables.

• Disconnect the electrical connections from the user inter face board.

• Remove the user inter face board retaining screw .

• Remove the user inter face board.

20.18 230V Controls board, refer to diagram 20.10.

Before starting refer to the front of **Section 20 Important information.**

• Unclip control panel user interface and hinge forward . Do not strain the cables.

• Disconnect the electrical connection from the 230V controls board.

• Remove the 230V controls board retaining screw.

• Remove the 230V controls board.

20.19 Mains switch, refer to diagram 20.10.

Before starting refer to the front of **Section 20 Important information.**

• Unclip control panel user interface and hinge forward . Do not strain the cables.

• Remove the mains switch.

• Disconnect the electrical connections from the mains switch.

20.20 Central heating pump head, refer to diagram 20.11.

Before starting refer to the front of **Section 20 Important information.**

• Remove the front panel**, refer to Section 17.3.**

• Lower the control panel**, refer to Section 17.4.**

• Drain down central heating water circuit of the boiler only, **refer to relevant part of diagram 20.1**.

Note: it is not necessary to drain down the entire heating system to carry out this work.

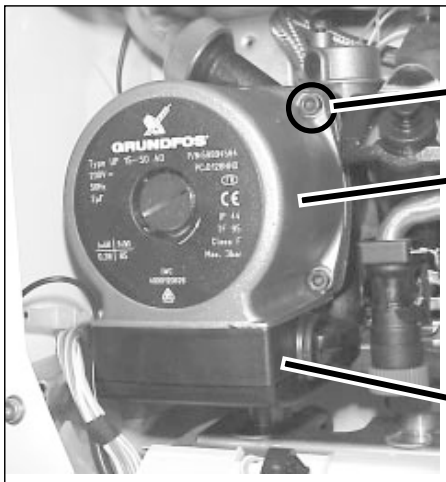

Diagram 20.11

• For ease of access if required remove the right hand side panel, refer to **Section 17.6.**

• Undo four head fixing screws and remove pump head.

• Gain access to the pump electrical connection box and remove cover.

• Disconnect pump cable from pump (avoid straining cables).

• Connect electrical connection to replacement pump head.

• Fit replacement pump head.

20.21 Filling system tap, refer to diagram 20.12.

Before starting refer to the front of **Section 20 Important information.**

• Remove the front panel**, refer to Section 17.3.**

• Lower the control panel**, refer to Section 17.4.**

• Drain down the hot water circuit only, **refer to relevant part of diagram 20.1**.

• Pull of the filling loop tap extension.

• Pull out slotted metal clip securing tap into housing, remove tap.

• Pull out slotted metal clip and remove pipe from tap.

20.22 Reduced pressure zone valve (RPZ), refer to diagram 20.12.

Before starting refer to the front of **Section 20 Important information.**

• Remove the front panel**, refer to Section 17.3.**

• Lower the control panel**, refer to Section 17.4.**

• Drain down the boiler only, **refer to relevant part of diagram 20.1**.

• Pull out slotted metal clip securing pipe to RPZ.

• Pull out slotted metal clip securing RPZ into housing, remove RPZ.

20.23 Boiler drain point, refer to diagram 20.13.

Before starting refer to the front of **Section 20 Important information.**

• Remove the front panel**, refer to Section 17.3.**

• Lower the control panel**, refer to Section 17.4.**

• Drain down the boiler only, **refer to relevant part of diagram 20.1**.

Pull out slotted metal clip securing boiler drain valve into housing, remove boiler drain valve.

20.24 Water flow sensor, refer to diagram 20.14.

Before starting refer to the front of **Section 20 Important information.**

• Remove the front panel**, refer to Section 17.3.**

• Lower the control panel**, refer to Section 17.4.**

Drain down the hot water circuit, **refer to relevant part of Section 20.1**.

• Undo the union nut on the cold water inlet isolating valve.

• Pull out slotted metal clip securing filling system tap into housing, swing the tap forwards.

• Pull out the two slotted metal clips retaining the domestic water inlet filter housing.

• Remove domestic water inlet filter housing.

• Remove electrical connections from water flow sensor.

• Pull off slotted metal clip and remove water flow sensor.

20.25 System water pressure sensor, refer to diagram 20.15.

Before starting refer to the front of **Section 20 Important information.**

• Remove the front panel**, refer to Section 17.3.**

• Lower the control panel**, refer to Section 17.4.**

Drain down the boiler, **refer to relevant part of Section 20.1**.

• Remove electrical connections from water pressure sensor.

• Pull off slotted metal clip and remove water pressure sensor.

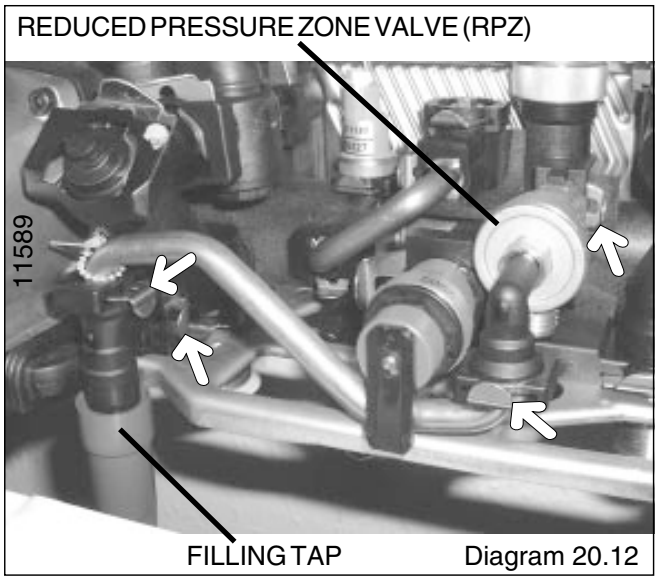

Diagram 20.12

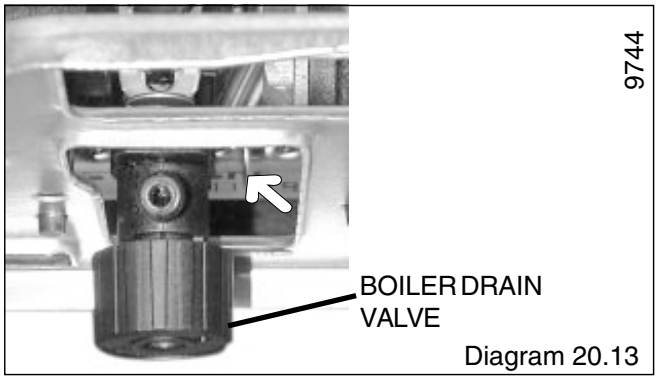

Diagram 20.13

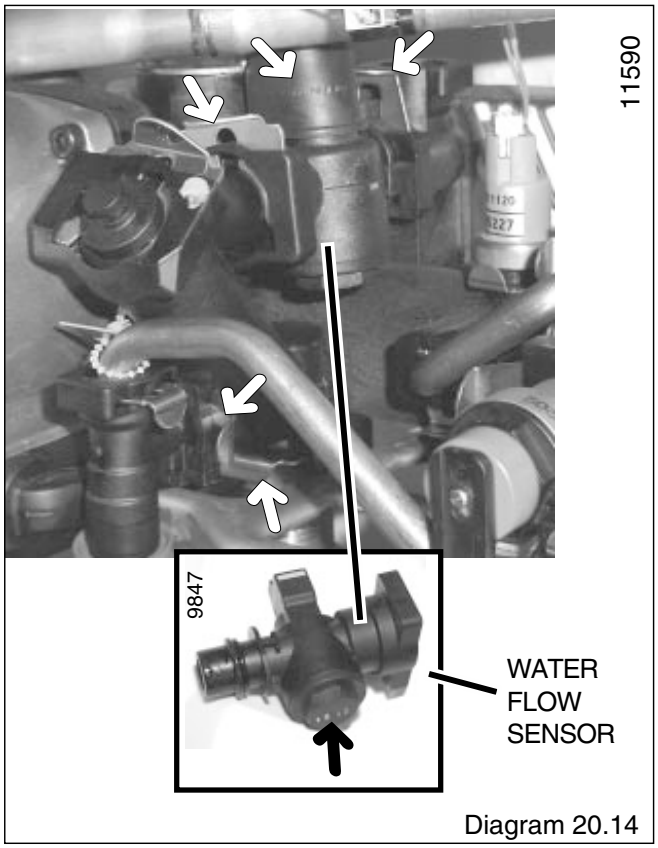

Diagram 20.14

20.26 Bypass valve, refer to diagram 20.15.

Before starting refer to the front of **Section 20 Important information.**

• Remove the front panel**, refer to Section 17.3.**

• Lower the control panel**, refer to Section 17.4.**

Drain down the boiler, **refer to relevant part of Section 20.1**.

Pull out slotted metal clip, ease out bypass valve from bypass valve housing.

20.27 Automatic air vent, refer to diagram 20.16.

Before starting refer to the front of **Section 20 Important information.**

• Remove the front panel**, refer to Section 17.3.**

• Lower the control panel**, refer to Section 17.4.**

• Drain down the boiler only, **refer to relevant part of diagram 20.1**.

• Unscrew to remove automatic air vent.

• After fitting replacement automatic air vent ensure the cap is open.

20.28 Gas Control valve, refer to diagram 20.17.

Before starting refer to the front of **Section 20 Important information.**

• Remove the front panel**, refer to Section 17.3.**

• Lower the control panel**, refer to Section 17.4.**

• Disconnect gas supply pipes and union nuts at the gas control valve.

• Disconnect supply pipe union nut at the burner injector bar.

• Remove gas control valve retaining clip from the underside of gas control valve.

• Remove the locking nut and brass washer from underside of gas control valve.

• Ease gas control valve forwards and disconnect electrical connections to gas control valve.

Note: The washers must be kept for use on reassembly.

• Withdraw gas control valve assembly.

• Fit replacement gas control valve.

If the step pressure requires adjusting, refer to Section 15 Changing Gas Type.

20.29 Gas control valve stepper motor, refer to diagram 20.18

Before starting refer to the front of **Section 20 Important information.**

• Remove the front panel**, refer to Section 17.3.**

• Lower the control panel**, refer to Section 17.4.**

• Remove the gas control valve**, refer to Section 20.28.**

• Disconnect the electrical connection from stepper motor.

• Remove the two screws securing stepper motor to the gas control valve.

• Fit replacement gas control valve stepper motor.

• Note: Take care not to damage the 'O' ring.

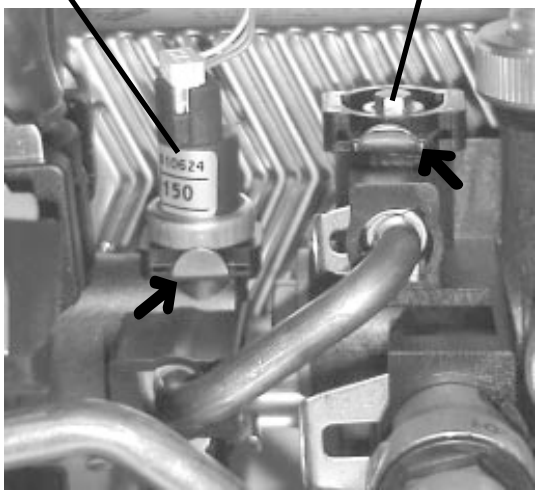

Diagram 20.15

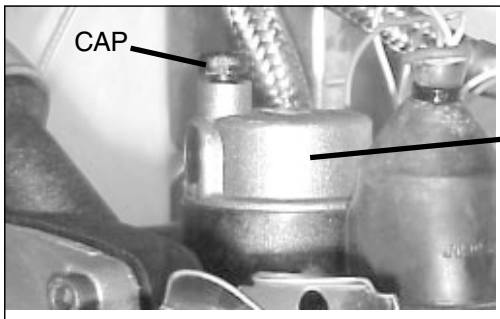

Diagram 20.16

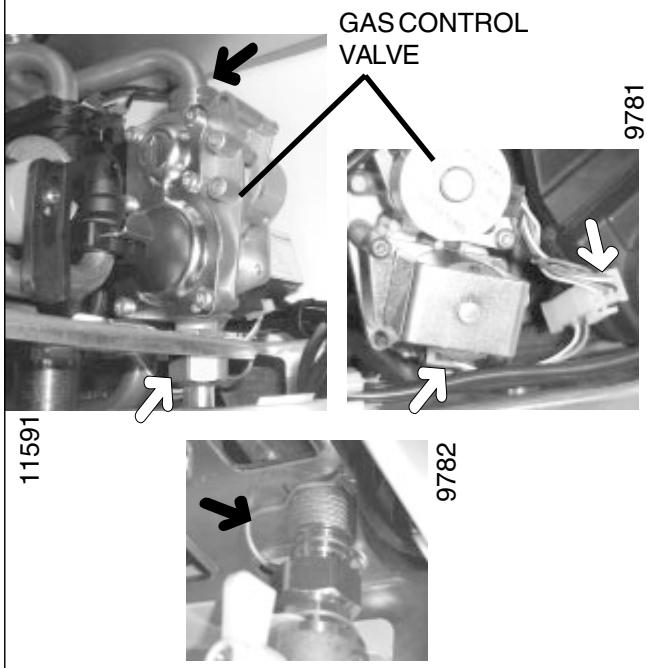

Diagram 20.17

20.30 Heating safety valve (3 bar RED), refer to diagram 20.19.

Before starting refer to the front of **Section 20 Important information.**

• Remove the front panel**, refer to Section 17.3.**

• Lower the control panel**, refer to Section 17.4.**

• Undo discharge pipe union nut.

• Pull out slotted metal clip from valve body and remove valve.

20.31 Three-way valve head, refer to diagram 20.20.

Before starting refer to the front of **Section 20 Important information.**

• Remove the front panel**, refer to Section 17.3.**

• Lower the control panel**, refer to Section 17.4.**

• For ease of access remove the right hand side panel**, refer to Section 17.6.**

• Remove electrical plug from valve head.

• Pull out slotted metal clip from valve body and remove valve head from body.

• Fit replacement valve head in reverse order to removal.

Note :

1) When refitting clip, ensure that letters YES are as shown.

2) It is not necessary to drain boiler to carry out this work.

20.32 Three-way valve actuator, refer to diagram 20.21.

Before starting refer to the front of **Section 20 Important information.**

• Remove the front panel**, refer to Section 17.3.**

• Lower the control panel**, refer to Section 17.4.**

• Drain down the boiler only, **refer to relevant part of diagram 20.1**.

• Remove the gas control valve, **refer to Section 20.28.**

• Remove 3-way valve head, **refer to Section 20.31.**

• Remove the three way valve actuator**, see diagram 20.21.**

20.33 Ignition unit, refer to diagram 20.22.

Before starting refer to the front of **Section 20 Important information.**

• For ease of access remove the left hand side panel**, refer to Section 17.6.**

• Disconnect electrical connections.

• Remove ignition unit securing screw.

• Pull upwards to release and remove the ignition unit from the retaining slot.

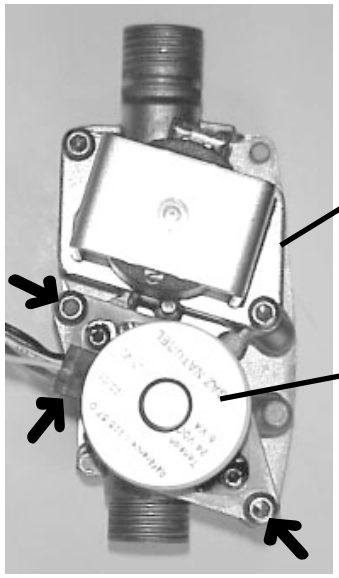

Diagram 20.18

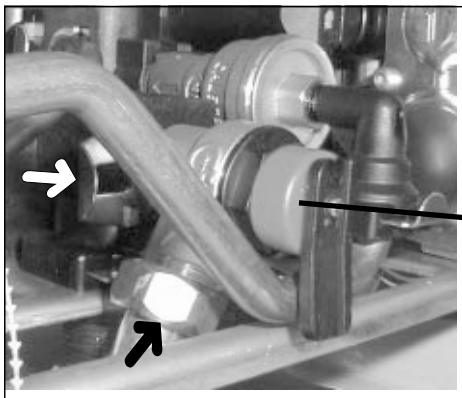

Diagram 20.19

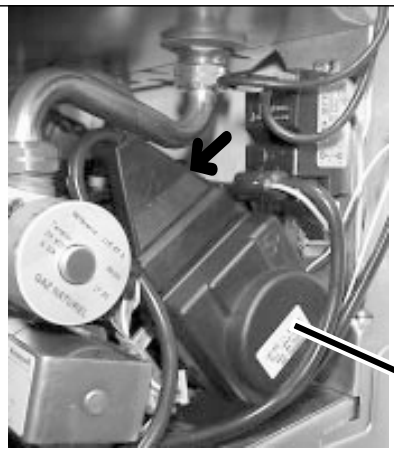

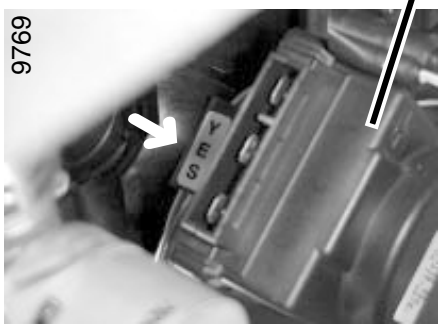

Diagram 20.20

20.34 Domestic hot water plate to plate heat exchanger

Before starting refer to the front of **Section 20 Important information.**

• Remove the front panel**, refer to Section 17.3.**

• Lower the control panel**, refer to Section 17.4.**

• Drain down the boiler and hot water circuit ,**refer to relevant parts of diagram 20.1**.

• Remove the water flow sensor**, refer to Section 20.24.**

• Unclip the central heating thermistor.

• Unscrew the heating flow pipe union nut, swing pipe forwards.

• Remove the system water pressure sensor**, refer to Section 20.25.**

• Supporting domestic hot water plate to plate heat exchanger, unscrew and remove two screws securing it onto pump mounting and 3-way valve/bypass housing.

• Remove plate to plate heat exchanger from boiler.

• Fit replacement plate to plate heat exchanger in reverse order to removal using new seals, supplied.

Note: Plate to plate heat exchanger mounting screws are offset to ensure correct fitting.

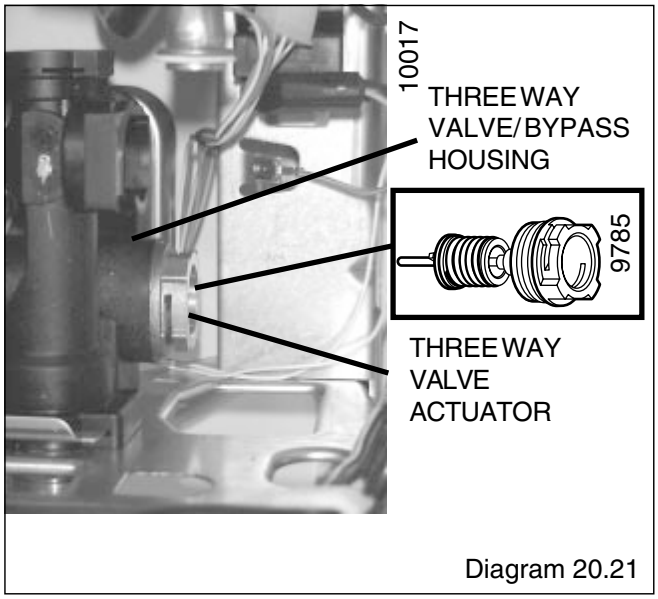

Diagram 20.21

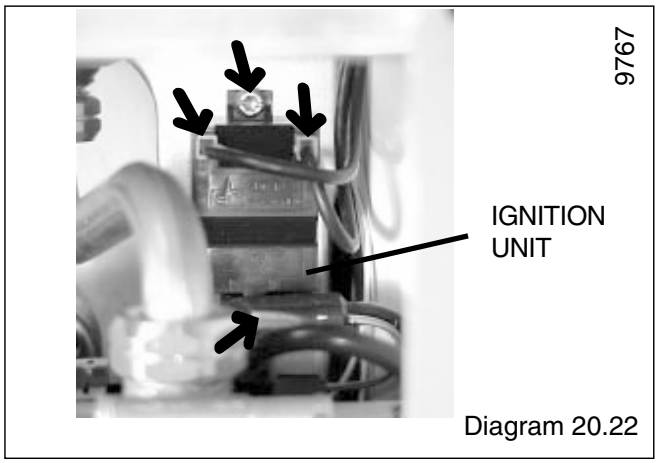

Diagram 20.22

20.35 Domestic safety valve (10 bar BLUE), refer to diagram 20.24.

Before starting refer to the front of **Section 20 Important information.**

• Remove the front panel**, refer to Section 17.3.**

• Lower the control panel**, refer to Section 17.4.**

• Drain down the hot water circuit only ,**refer to relevant parts of diagram 20.1**.

• Undo discharge pipe union nut.

• Pull out slotted metal clip from valve body and remove valve.

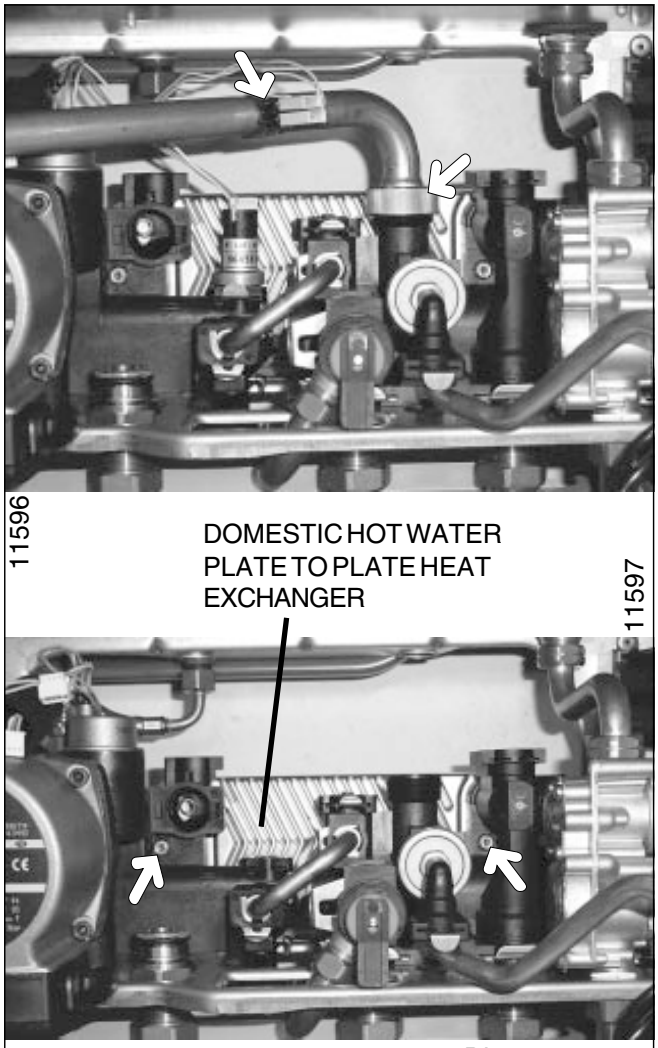

Diagram 20.23

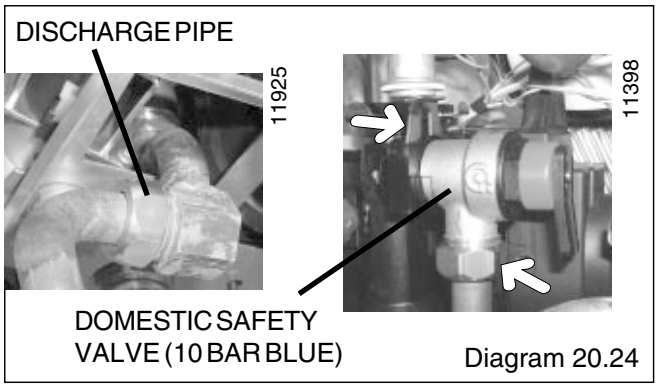

Diagram 20.24

20.36 Micro accumulator vessel thermistor, refer to diagram 20.25.

Before starting refer to the front of **Section 20 Important information.**

• Locate micro accumulator vessel thermistor, on top of the micro accumulation vessel.

• Disconnect the inline electrical connection plug to the micro accumulator vessel thermistor.

• Pull out to remove the thermistor.

20.37 Micro accumulator vessel, refer to diagram 20.26.

Before starting refer to the front of **Section 20 Important information.**

For this operation the boiler must be removed from the wall.

• IMPORTANT: With regards to the manual handling operations, 1992 regulations, the following operation exceeds the recommended weight for one man lift.

• Remove the front panel**, refer to Section 17.3.**

• Drain down the boiler and hot water ,**refer to relevant parts of diagram 20.1**.

Note: It is not necessary to drain down entire heating system to carry out this work.

• Disconnect the flue system.

• Disconnect the boiler pipes.

• Disconnect the pressure relief valve discharge pipes.

• Disconnect the mains cable and any external controls cables.

• Lift up to remove the boiler from the wall.

• From the rear of the boiler.

• Disconnect the inline electrical connection plug to the micro accumulator vessel thermistor.

• Remove the slotted metal clips to disconnect pipes from the bottom of the micro accumulator vessel. **Note:** Take care there will be a loss of water.

• Remove the right hand side panel, **refer to Section 17.6.**

• Bend back securing tab to release vessel from boiler frame.

• Remove the vessel from the boiler, taking care not to strain the heating element electrical cable.

• Pull out slotted metal clip and pull to remove heating element from micro accumulator vessel.

20.38 Micro accumulator vessel heating element, refer to diagram 20.27.

Before starting refer to the front of **Section 20 Important information.**

• Drain hot water circuit only.

• Remove the micro accumulatior vessel, **refer to Section 20.37.**

• Lower the control panel**, refer to Section 17.4.**

• Gain access to rear of control panel, **see diagram 20.9.**

• Disconnect the electrical connection plug to the micro accumulator vessel heating element at the control board PCB connection H4, **see diagram 20.9.**

• Release the micro accumulator vessel heating element cable from the securing clips, note the routing of the cable for reassembly.

• Pull out micro accumulator vessel thermistor securing clip and remove thermistor from heating element.

20.39 Expansion vessel, refer to diagram 20.28.

Renewal of the expansion vessel requires the boiler to be removed from the wall. As an alternative, a separate expansion vessel of the same specification may be connected as close as possible to the boiler, leaving the original in position, refer to the installation instructions.

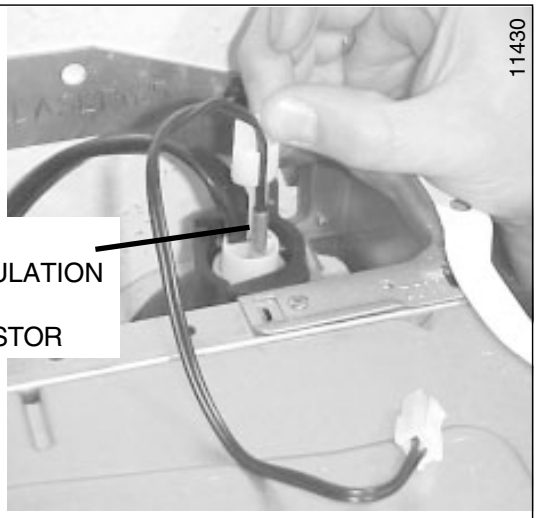

Diagram 20.25

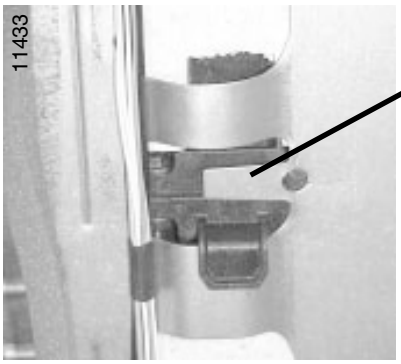

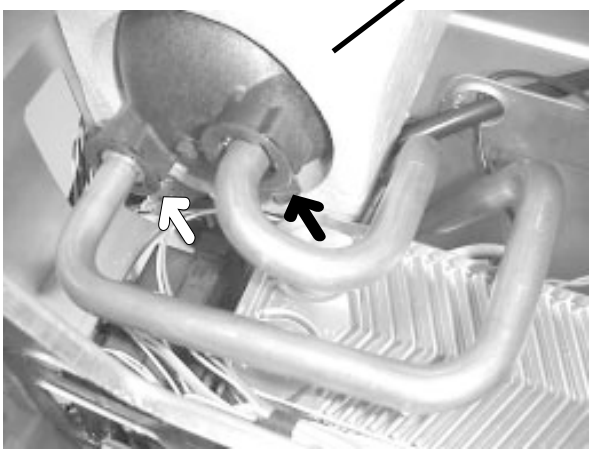

Diagram 20.26

Replacing the expansion vessel

Before starting refer to the front of **Section 20 Important information.**

• For this operation the boiler must be removed from the wall.

• IMPORTANT: With regards to the manual handling operations, 1992 regulations, the following operation exceeds the recommended weight for one man lift.

• Remove the front panel**, refer to Section 17.3.**

• Lower the control panel**, refer to Section 17.4.**

• Drain down the boiler only ,**refer to relevant parts of diagram 20.1.**

• Disconnect the flue system.

• Disconnect the boiler pipes at the fixing jig.

• Disconnect the pressure relief valve discharge pipe.

• Disconnect the mains cable and any external controls cables.

• Lift up to remove the boiler from the wall.

• Remove sealed chamber cover, **refer to Section 17.4.**

• Remove the combustion chamber cover, **refer to Section 17.5.**

• Remove the fan, **refer to Section 17.10.**

• Remove air pressure switch sensing tube from the side of the flue hood, **see diagram 17.9.**

• Release both side panels, **refer to Section 17.6.**

• Remove the flue hood, lift up and off to release from rear location tabs.

• Remove the expansion vessel retaining screw.

• From the rear of the boiler.

• Undo pipe coupling on expansion vessel.

• Lift to remove expansion vessel.

Note: Check that expansion vessel pressure is correct, **see 'Section 1 Technical Data'.**

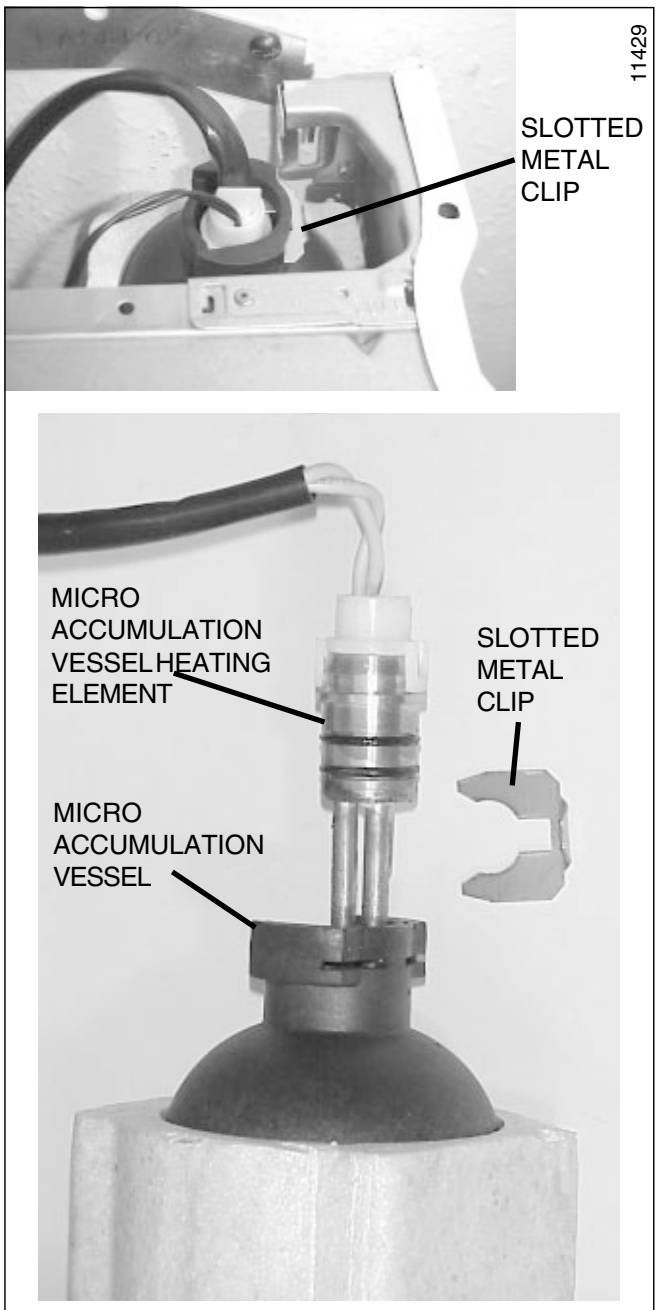

Diagram 20.27

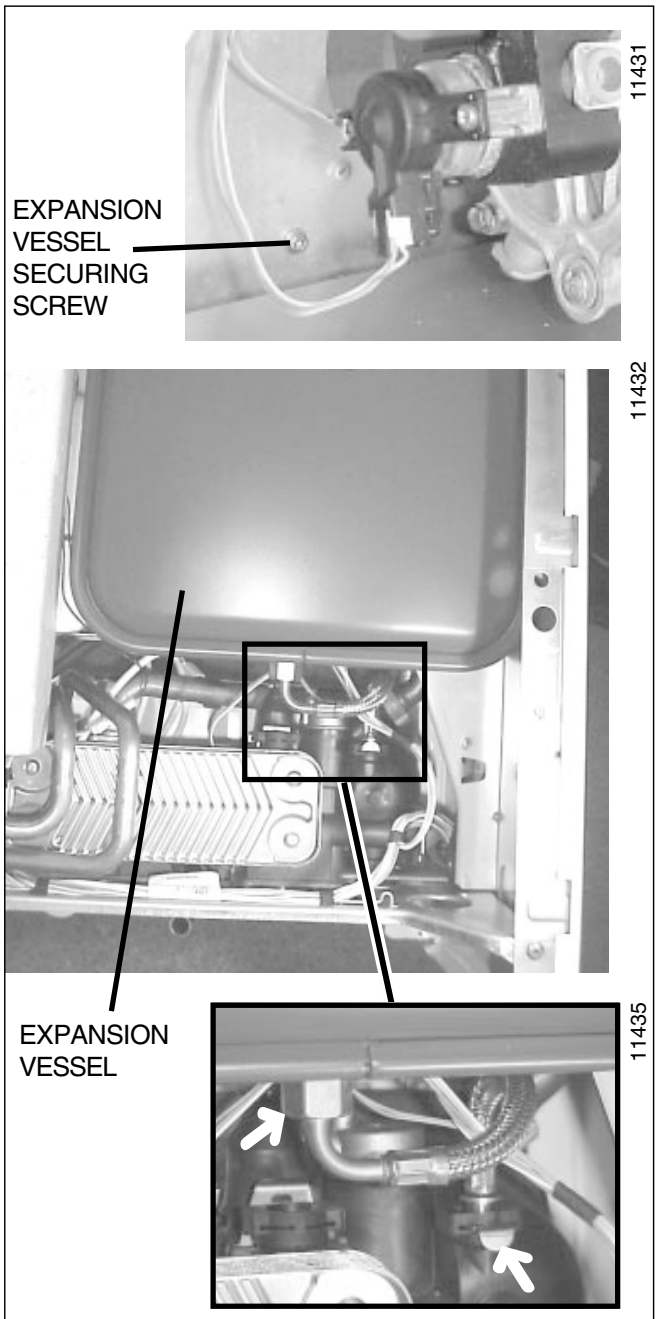

Diagram 20.28

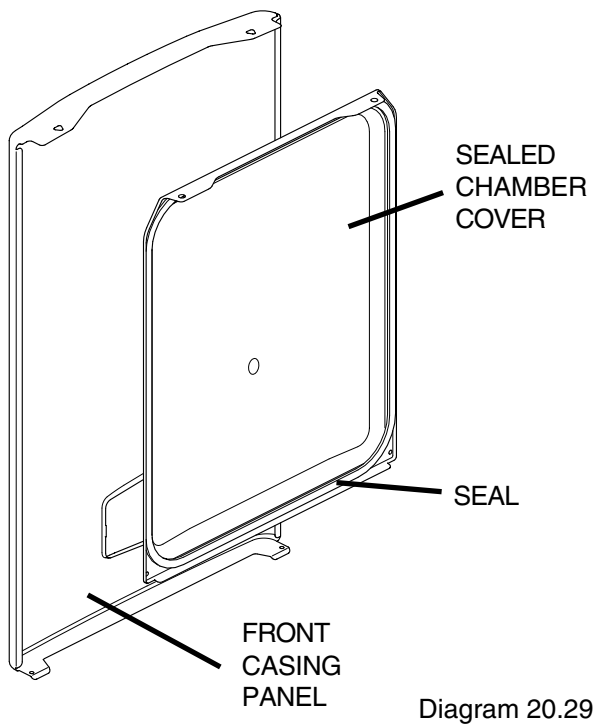

Diagram 20.29

20.40 Sealed chamber cover seal, refer to diagram 20.29

Before starting refer to the front of **Section 20 Important information.**

- Remove the front panel**, refer to Section 17.3.**
- Remove the sealed chamber cover**, refer to Section 17.5.**
- Remove the old seal, thoroughly clean the casing. Fit the new seal, it is supplied to the correct length.

Note: Ensure the seal is fitted correctly giving an air tight seal.

21 Spare parts

When ordering spare parts, quote the part number and description, stating the appliance model number and serial number from the data badge.

Short parts list

No.	Description	Part No.	G.C. No.
1	Central heating thermistor	S57398	•••••••
2	Fan	S1008800	•••••••
3	Air pressure switch	S1008900	•••••••
4	Domestic water flow sensor	S57202	•••••••
5	Printed circuit board - Main	S1008200	•••••••
6	Pump head	S1005200	•••••••
8	System water pressure sensor	S7205	•••••••
9	Gas control valve	S1004500	•••••••
10	Discharge safety valve	S1006700	•••••••
11	Overheat thermostat	S1008000	•••••••
12	Ignition electrode	S1003800	•••••••
13	Flame sense electrode	S1003700	•••••••
14	230V controls board	S1009100	•••••••
15	User interface PCB	S1008100	•••••••
16	Stepper motor	S57434	•••••••
17	Ignition unit	S1003800	•••••••
18	Three way valve	S1006400	•••••••
19	Pressure relief valve	S1006700	•••••••
20	Heat exchanger	S1006500	•••••••
21	Burner	S1004200 (F 24 E)	•••••••
		S1011600 (F 30 E)	•••••••
22	Micro accumulation vessel	S1016800	•••••••
23	Micro accumulation vessel thermistor	S1017300	•••••••

Because of our constant endeavour for improvement details may vary slightly from those in the instructions.